DEVELOPMENT STANDARDS
FOR DESIGN AND INSTALLATION OF
WATER AND SEWERAGE SYSTEMS
CITY OF FAIRBURN, GEORGIA

CITY OF FAIRBURN
WATER AND SEWER DEPARTMENT
56 MALONE STREET
FAIRBURN, GEORGIA 30213

May 2015

STATEMENT OF NECESSITY

It is hereby determined necessary for the protection of the public health, safety, welfare, and convenience of the citizens of City of Fairburn, and for the orderly development of Department water distribution and sewage collection and transportation systems, to provide development standards and procedures for the installation of water and sewerage systems, assigning the cost for the installation of said facilities pursuant to the Authority granted by Article IX, Section III of the constitution of Georgia as amended.

PURPOSE

It is the purpose of these standards and procedures to insure that all water distribution and sewage collection and treatment systems, constructed in the City of Fairburn, satisfy all existing and future City of Fairburn, State, and Federal regulations.

After the passage of this resolution, water and sewer systems in the City of Fairburn shall be constructed only after the plans have been approved as outlined in these standards. Only systems constructed in accordance with these standards will be allowed to connect to the City of Fairburn Water or Sewerage System either immediately following construction or at any time in the future.

2015-06

STATE OF GEORGIA

COUNTY OF FULTON

RESOLUTION

A RESOLUTION BY THE MAYOR AND COUNCIL OF THE CITY OF FAIRBURN, GEORGIA TO ADOPT DEVELOPMENT STANDARDS FOR WATER AND SEWERAGE SYSTEMS FOR THE CITY OF FAIRBURN, GEORGIA; TO PROVIDE AN EFFECTIVE DATE; AND FOR OTHER PURPOSES.

WHEREAS, it is the desire of Mayor and City Council to provide for the safe and efficient operation of the water and sewer systems, and to provide standards for the construction and attachment to systems and penalties for violation of regulations; and

WHEREAS, the Mayor and City Council find that it is in the best interest of the citizens of Fairburn to adopt Water and Sewer Development Standards governing the water and sewer systems and to provide for other lawful purposes;

NOW THEREFORE BE IT RESOLVED, by the Mayor and City Council of the City of Fairburn as follows:

Section I.

A. That Development Standards For Design and Installation of Water and Sewerage Systems of the City of Fairburn, Georgia, be adopted. These standards shall apply to all water and sewerage systems constructed within the boundaries of Fairburn City Limits, Fairburn, Georgia.

B. That this resolution shall be in force and effect from and after the date of its approval by the Mayor and City Council of Fairburn, Georgia.

C. That the City of Fairburn may withhold the issuance of sewer and water taps/connections, or acceptance of any building to which this resolution applies, until there is compliance with the regulations and specification contained in said Development Standards for Water and Sewerage Systems. That the City of Fairburn may withhold the issuance of permits and/or occupancy or use permit in any subdivision, development or improvement or any part thereof, to which this resolution applies, until there is compliance with the regulations and specifications contained in Development Standards for Water and Sewerage Systems.

D. That violation of this Resolution shall be punished in accordance with Section 15-10-60 of the Official Code of Georgia.

Section II. The effective date of this Resolution shall be the date of adoption unless otherwise specified herein.

BE IT RESOLVED by the City Council of FAIRBURN, this 11th day of May, 2015.

CITY OF FAIRBURN, GEORGIA

Mario Avery, Mayor

APPROVED AS TO FORM:

William R. Turner, City Attorney

ATTEST:

Brenda James, City Clerk

PROCEDURE FOR APPROVAL AND ACCEPTANCE

Prior to the design stage of a project, both developers and engineers are encouraged to discuss the water distribution and sewage collection needs with the Water and Sewerage Department to assure compatibility with Department plans, and to review the requirements as documented in these Development Standards. All construction plans for water and sewer systems must be prepared by a Professional Engineer registered in the state of Georgia.

Initially, the developers and engineers shall submit two (2) copies of preliminary plans, in accordance with the checklist included in these standards, for review by the Water and Sewerage Department. A review fee will be charged for each water and sewer plan submitted. The Water and Sewerage Department reserves the right to increase these review fees, based on the complexity of the proposed project and the need for outside consultants to review portions of the plans. One (1) set of the preliminary plans will be returned with appropriate comments.

Prior to final plans being submitted for review, the developers and engineers shall make the required revisions to the plans and prepare other permits and approvals to be submitted to the Georgia Department of Transportation and other necessary agencies.

Plans submitted for final review shall include three (3) copies of the revised plans for Water and Sewerage Department Review, three (3) copies for Georgia Environmental Protection Division review, and five (5) copies of Georgia D.O.T. permits and drawings in accordance with these standards and the latest edition of the Georgia D.O.T. Utility Accommodations Manual. Additional sets may be required if other agencies are involved in the approval process.

When the final, revised plans are submitted to the Water and Sewerage Department, a final review will be made prior to submitting the plans to outside agencies for further approval. If additional reviews are necessary due to neglect of the initially reviewed plans, an additional $25.00 review fee will be required. If the final review is approved by the Water and Sewerage Department, the additional

plans will be submitted to the outside agencies for further approval. When approval is received from those agencies, and connection fees are paid by the developer, the Water and Sewerage Department will approve the plans for construction. Approval shall be valid for a period of one (1) year. If construction has not begun within one (1) year, the approval shall be invalid and the plans and specifications must be resubmitted as stated above.

Prior to beginning construction, the developer shall give forty-eight (48) hour notice to the Water and Sewerage Department. Authorized representatives of the Water and Sewerage Department shall have access to the work for inspection. When all water and/or sewer construction has been completed, the developer or his representative shall meet with a representative of the Water and Sewerage Department at the job site. All permits, drawings and construction will be examined at this time to insure that the work has been completed in accordance with the approved plans and these standards. If additional work is required by the developer, it will be noted at this time and re-inspected upon completion. If additional trips are required following this re-inspection, due to negligence by the developer, a re-inspection fee will be required. When the construction has been completed and passes the final inspection by the Water and Sewerage Department, the developer shall submit to the Department transfer of ownership documents, a reproducible mylar (24" x 36") set of as-built plans, 1-pdf and 1- dwg as-built file for future reference.

The City of Fairburn Water and Sewerage Department will, upon receipt of the as-built plans, issue a letter of acceptance thus beginning the two year warranty period.

The following guide is a typical process by which a project would proceed from initial contact with the developer and/or his engineer through the final acceptance of the utility by the Water and Sewerage Department.

GUIDELINE FOR APPROVAL AND ACCEPTANCE

1. Developer
    1. Meets with Water and Sewerage Department and Planning Department to discuss system and obtain standards.
    2. Submits one (1) hard copy and pdf of preliminary plans with checklist for review.

2. Water and Sewerage Department
    1. Reviews plans to check for compliance with Development Standards.
    2. Marks plan deficiencies along with checklist.
    3. Meets with Developer to discuss changes necessary for approval.
    4. Returns marked up plans to the Developer so that necessary changes may be made and plans resubmitted for final review and Environmental Protection Division approval, if required.
3. Developer
    1. Pays review fees to the Water and Sewerage Department.
    2. Obtains state approval from the Georgia Department of Natural Resources, Environmental Protection Division (if applicable).
    3. Corrects plans as indicated on marked up plans.
    4. Submits two (2) copies 1-pdf file of revised plans to Water and Sewerage Department for construction approval.
    5. Provides completed D.O.T. permit application drawings to the Water and Sewerage Department for submittal.
    6. Obtains necessary easements and permits for construction.

4. Water and Sewerage Department
    1. Reviews final plans to determine if all corrections have been made as marked on preliminary plans.
    2. Approves plans for construction and returns one (1) set of plans to Developer.
    3. If corrections were not made as marked on the originally reviewed plans, an additional $25.00 fee may be assessed before the plans are resubmitted for a third review.

5. Developer
    1. Secures the services of a competent Contractor to perform the construction on the project.
    2. Submits name and references of the Contractor to Water and Sewerage Department for approval.
    3. Upon Contractor approval, and a preconstruction conference is completed, begins construction. Contractor shall furnish any shop drawings and submittals requested.
    4. Notifies Water and Sewerage Department forty-eight (48) hours prior to any construction.

6. Water and Sewerage Department
    1. Periodically inspects construction for concurrence with the Development Standards.
    2. Witnesses all testing.

7. Developer
   1. Submits one (1) set of reproducible mylar As-Built plans, one (1) “blueline”, and electronic .dwg and 1 pdf format to the Water and Sewerage Department.
      a. Industrial and commercial developments: Submit one (1) set of reproducible mylar (24" x 36") civil site plan and details, one (1) “blueline”, and electronic .dwg and pdf file along with all applicable backflow prevention assembly inspection reports and test forms prior to activation of water service. Construction water may be provided on a temporary basis through a properly protected outlet.
   2. Submits a letter to City of Fairburn Water & Sewerage Department requesting acceptance of water and/or sewer system along with 3 sets of as-built plans and provides Water and Sewerage Department with a two (2) year Maintenance Agreement upon acceptance of System. Sample Maintenance Agreement: Bill developer for unforeseen latent damage caused by construction process.
   3. Deeds any necessary property and easements to City of Fairburn.

8. Water and Sewerage Department
   1. Water and Sewerage Department performs final inspection.
   2. No service shall be provided to developing lots until all utilities proposed for the development have been installed and final approval has been made.
   3. If the final inspection reveals deficiencies that need correcting, a reinspection will be required. If the corrections noted are not addressed prior to the reinspection, a $75.00 reinspection fee may be assessed prior to the other reinspections and acceptance.

9. Water and Sewerage Department
   1. Issues a letter of acceptance beginning the two year warranty period.

PROJECT CHECKLIST

City of Fairburn Water and Sewerage Department

Date Rec'd _____ Review Date _____
Engineer _____
Development _____
Review Comments:

The following comments are based on the policy of The City of Fairburn Water and Sewerage Department, outlined in these Development Standards as approved by the City of Fairburn Water and Sewerage Department. If there are any questions, please contact The City of Fairburn Water and Sewerage Department at (770) 964-2244 x-351.

Construction Approval Checklist

_____3 sets of water/sewer plans (24" x 36") and specifications.
_____Project location map.
_____One (1) set of EPD approved plans and specifications (if applicable).
_____All proposed and existing roadways complete with name, center-line, pavement width, and right-of-ways. Indicate if paved or unpaved.
_____A copy of approved D.O.T. permit (if applicable).
_____Title block including the name, address, telephone number, and e-mail address of the project engineer.
_____Developer's name, address, telephone number and e-mail address.
_____Location of all existing and proposed utilities and easements including storm drainage location - topographical information at 2' intervals.
_____Stamp of design engineer currently registered in the State of Georgia.
_____Lengths, sizes and materials of construction, etc.
_____Plan and profile of the proposed line locations, including appropriate station numbers and line slopes.
_____Details of each bore installation under state or county roads.
_____Typical water/sewer detail sheet with all applicable details.
_____Note: Notify City of Fairburn Water and Sewerage Department engineer _48_ hours before beginning every phase of construction or pressure testing.
_____Restrained Joint Pipe Method_ Concrete thrust blocking is to be discouraged.
_____Manhole construction details, connection locations.
_____Pump.
_____Construction easement locations if water/sewer line crosses or is constructed on private property. Bearings and other dimensions necessary for the construction of the proposed sewer line in the easement provided.
_____Project Name.
_____Locations of connections to existing systems with details.
_____Plans and specifications to be in accordance with the City of Fairburn Water & Sewerage Department Development Standards.
_____Submit Specification sheets, shop drawings, and submittals for exact materials to be used to Water and Sewerage Department for approval.

Completed Construction Checklist

_____Line grades and Manhole locations
_____Completed service lines.
_____Cleanup.
_____All applicable water and sewer line tests successfully completed and witnessed by Water Department representative.
_____Pipe certifications from pipe manufacturer.
_____Letter from Developer requesting acceptance.
_____1sets of As-Built plans, 1 set of mylar reproducibles (24 x 36) stamped by licensed engineer currently registered in the State of Georgia, and 1 set .dwg and pdf files.
_____2 year bond or maintenance agreement.

REVIEW FEE SCHEDULE

RESIDENTIAL DEVELOPMENTS

$50.00 per UNIT/LOT

If comments are not addressed, additional charges will be assessed in accordance with actual review cost.

COMMERCIAL AND INDUSTRIAL DEVELOPMENTS

$500.00 MINIMUM

FINAL INSPECTION

INITIAL VISIT - NO CHARGE
REINSPECTION VISIT - NO CHARGE
SECOND REINSPECTION VISIT - $75.00
SUBSEQUENT REINSPECTIONS - $100.00 EACH
CHLORINATION TEST FEES AND PRESSURE TEST FEES - 1ST FREE
SUBSEQUENT CHLORINATION AND PRESSURE TEST - $100.00 EACH

* Based on the complexity of the proposed project and the need for outside consultants to review portions of the plans, the Water and Sewerage Department reserves the right to increase these review fees.

DEFINITIONS

The definitions of terms used in the Development Standards shall be as interpreted in the Georgia Safe Water Drinking Act of 1977 and Chapter 391-3-5 "Rules for Safe Drinking Water" or as defined herein:

1. "Department" - the individual, official, board, department or agency established and authorized by county, city and/or other political subdivision created by law to administer and enforce the provisions of the Plumbing Code, the Federal and State Safe Drinking Water Acts, and the Ordinances, Rules, Regulations, and Policies of City of Fairburn, in the state of Georgia.
2. "Authorized Water and Sewerage Department Representative" - any individual employed by the City of Fairburn Water and Sewerage Department given direct authorization, from the Superintendent of the City of Fairburn Water and Sewerage Department to act as a department representative.
3. "Backflow" - a reverse flow in a water system from the normal or intended direction.
4. "Backflow Preventer (BFP)" - a device designed to prevent reverse flow in a water system. The term should normally be used where backpressure-type backflow is implied.
5. "Branch Sewer" - a sewer which receives sewage from a relatively small area, and discharges into a main sewer.
6. "Contaminant" - means any physical, chemical, biological, or radiological substance or matter in water that could cause a public health hazard.
7. "Customer" - shall mean every person who is responsible for contracting (expressly or implicitly) with the City of Fairburn Water and Sewerage Department in obtaining, having, or using sewer connections with, or sewer tap to, the sewer system of the City of Fairburn Water and Sewerage Department and in obtaining, having, or using water and other related services furnished by the City of Fairburn Water and Sewerage Department for the purpose

of water supply or sewage disposal through said system.

8. "Department" - City of Fairburn Water and Sewerage Department.
9. "Developer" - Any person or entity, including their agent or construction contractor, who wishes to construct new water or sewerage lines for new subdivisions or other development.
10. "Drinking water" - water supplied for domestic use or human consumption, meeting the maximum contaminant levels established by the State.
11. "Easement" - shall mean an acquired legal right for the specific use of land owned by others.
12. "EPD" - shall mean the Environmental Protection Division of the Department of Natural Resources of the State of Georgia.
13. "Force main" - a pipe for delivering wastewater from a pumping station to its destination which may be a treatment plant or a higher point in the sewerage system.
14. "Government Owned Public Water System" - system to provide piped water to the public for human consumption. Such term includes (1) any collection, treatment, storage, and distribution facility, located in unincorporated City of Fairburn, and owned by City of Fairburn.
15. "Health Officer" - shall mean the director of the County Board of Health or other person designated by the Board of Commissioners and their duly appointed assistants.
16. "House Sewer or Service Line" - a pipe conveying sewage from a single building to a common sewer or point of immediate disposal.
17. "Industrial wastes" - shall mean the wastewater from industrial processes as distinct from domestic or sanitary wastes.
18. "Infiltration/Inflow" - shall mean groundwater and surface water which leaks into the sewers through cracked pipes, joints, manholes, or other openings.
19. "Inspector" - an individual qualified in a vocation and authorized to make inspections, interpret codes, regulations, and procedures.
20. "Interceptor Sewer" - a sewer which receives flow from a number of main sewers and

normally does not have service line connections.

21. "Main Sewer" - a sewer to which one or more branch sewers are tributary. Also called a Trunk Sewer.
22. "Manager" - the person responsible for the maintenance and operation of the water system.
23. "May" - is permissive.
24. "Outfall Sewer" - a Sewer which receives the sewage from a collecting system and carries it to a point of treatment or pumping station.
25. "Person" - shall mean any individual, firm, company, association, society, corporation, or group.
26. "Pollutant" - any substance that, if introduced into the potable water system, could be objectionable but could not create a health hazard.
27. "Pollution" - the man-made or man-induced alteration of the chemical, physical, biological, and radiological integrity of water.
28. "Potable Water" - any water that, according to recognized standards, is safe for human consumption.
29. "Privately Owned Public Water System" - any system to provide piped water to the public for human consumption. Such term includes any collection, treatment, storage, and distribution facility, designed to serve fifteen (15) or more units from any source other than City of Fairburn, being owned and operated by any entity other than City of Fairburn.
30. "Professional Engineer" - a person registered to practice professional engineering in the State of Georgia in accordance with the provisions of the Act governing the practice of professional engineering in Georgia.
31. "Public sewer" - shall mean a common sewer controlled by a governmental agency or public utility.
32. "Public Water Supply/System" - a water system (including but not limited to supply,

treatment, transmission and distribution facilities and appurtenances) operated as a Public Utility that supplies potable water to the service-connection of the Consumer's water system. Herein defined, as the City of Fairburn Water Department potable water supply/system as operated by the City of Fairburn Water and Sewerage Department.

33. "Representative" - a person authorized to represent the Superintendent of the City of Fairburn Water and Sewerage Department.
34. "Sanitary Sewer" - A sewer pipe which carries sewage and to which storm, surface, and ground waters are not intentionally admitted.
35. "Service-Connection" - the point of delivery of water to a premises: the normal location of the meter. It is the end of the water purveyor's jurisdiction and the beginning of the Plumbing Official's and the Consumer's, and defined as follows:

    Dedicated - a single service connection that is designated for one use only; (i.e., domestic, fire protection, or irrigation.)

    Combination - a single service connection that is designated for more than one use; (i.e., domestic and fire protection.)
36. "Sewage" - is the spent water of a community. (See Wastewater)
37. "Sewage works" - (sewerage) shall mean all facilities for collecting, pumping, treating, and disposing of sewage. (See Wastewater Facilities)
38. "Sewer" - a gravity flow pipe or conduit, normally not flowing full, for carrying storm water, sewage and other waste liquids.
39. "Shall" - is mandatory.
40. "Source of water supply" - the waters of the State from which raw water is taken into a public water system to be treated and distributed.
41. "Spring" - a surface water where water naturally issues forth for the first time from rock or soil onto the land or into a body of water.

42. "Spring Line" - the horizontal line on a section of pipe located at O.D./2.
43. "Standard methods" - "Standard Methods for the Examination of Water and Sewage", as published jointly by the American Public Health Association, the American Water Works Association and the Water Pollution Control Federation or with any other analytical procedure approved by the Commission.
44. "Storm drain" (sometimes termed "storm sewer") - shall mean a drain or sewer for conveying water, groundwater, subsurface water, or unpolluted water from any source and excluding sewage and industrial wastes other than unpolluted cooling water. (See Storm Sewer)
45. "Storm Sewer" - a sewer which carries storm water and surface water, street wash and other wash waters, or drainage, but excludes sewage and industrial wastes. Also called a storm drain.
46. "Storm water" or "Runoff" - any flow occurring during or following any form of natural precipitation and resulting therefrom.
47. "Supplier of water" or "Supplier" - any person who owns or operates a public water system.
48. "Surface waters" - includes any and all rivers, streams, branches, creeks, ponds, tributary streams and drainage basins, natural lakes, artificial reservoirs or impoundments.
49. "Ultimate Tributary Capacity" - the potential amount of sanitary sewer that a particular drainage basin may eventually convey to a lift station or a water pollution control facility.
50. "Unpolluted water" - is water of quality equal to or better than the effluent criteria in effect or water that would not cause violation of receiving water quality standards and would not be benefited by discharge to the sanitary sewers and wastewater treatment facilities provided.
51. "Wastewater" - shall mean the spent water of a community. From the standpoint of source, it may be a combination of the liquid and water carried wastes from residences, commercial building, industrial plants, and institutions, together with any groundwater, surface water, and stormwater that maybe present. (See Sewage)

52. "Wastewater facilities" - shall mean the structures, equipment, and processes required to collect, carry away, and treat domestic and industrial wastes and dispose of the effluent. (See Sewage Works)
53. "Watercourse" - shall mean a natural or artificial channel for the passage of water either continuously or intermittently.
54. "Well" - any excavation that is cored, bored, drilled, jetted, dug, or otherwise constructed for the purpose of locating, testing, or withdrawing ground water.

PREFACE

STATEMENT OF NECESSITY I

PURPOSE II

RESOLUTION ADOPTING ORDINANCE III

PROCEDURES FOR APPROVAL AND ACCEPTANCE IV

DEFINITIONS XII

TABLE OF CONTENTS

Page No.

1. WATER SYSTEM DESIGN REQUIREMENTS 1

1.1 General Design Requirements 1

1.2 Materials of Construction 4

1.2.1 General Material Requirements 4
1.2.2 Pipe 4
1.2.2.1 Ductile Iron Pipe (Required Over 8") 4
1.2.2.2 Polyvinyl Chloride Pipe (Maximum 8") 4
1.2.2.3 Steel Casing Pipe 5
1.2.2.4 Service Tubing (C901) 5
1.2.2.5 Service Pipe Encasement - See Insert 6
1.2.3 Joints and Gaskets 6
1.2.3.1 Mechanical Joint Ductile Iron Pipe 6
1.2.3.2 Slip Joint Ductile Iron Pipe 6
1.2.3.3 Polyvinyl Chloride Pipe 6
1.2.3.4 Polyethylene Service Pipe 6
1.2.4 Pipe Fittings and Specials 6
1.2.4.1 Specials 6
1.2.5 Valves 7
1.2.5.1 Twelve (12) Inch and Larger Valves 7
1.2.5.2 Ten (10) Inch and Smaller Valves 7
1.2.5.3 Air Release Valves 7
1.2.5.4 Check Valves and Backflow Preventers 7
1.2.5.5 Tapping Sleeves, Crosses and Valves 7
1.2.6 Valve Boxes 7
1.2.7 Fire Hydrants 7
1.2.8 Service Saddles 8
1.2.9 Service Pipe Couplings 8
1.2.10 Corporation Stops 8
1.2.11 Meter Stops 8
1.2.12 Meter Coupling/Backflow Preventer 8
1.2.13 Service Meters 9
1.2.13.1 House Service Meters 9
1.2.13.2 Commercial and Industrial Meters 9
1.2.14 Meter Boxes and Enclosures 9
1.2.14.1 Residential Meter Boxes 9
1.2.14.2 Commercial and Industrial Meter Enclosures 9
1.2.15 Manhole Covers, Frames, and Steps 9

1.2.16 Concrete Manholes ... 9
1.2.17 Manhole Joints and Gaskets ... 9
1.2.18 Valve Markers ... 10
1.2.19 Underground Electronic Marker System ... 10
1.2.20 Residential Backflow Preventers ... 10
1.2.21 Commercial and Industrial Backflow Preventers ... 10

2. SEWER SYSTEM DESIGN REQUIREMENTS ... 10

2.1 General Design Requirements ... 10
2.1.1 Gravity Flow Systems ... 11
2.1.1.1 Location ... 11
2.1.1.2 Design Factors ... 11
2.1.1.3 Minimum Line Sizes ... 12
2.1.1.4 Depth ... 12
2.1.1.5 Slope ... 12
2.1.1.6 Manholes ... 12
2.1.2 Pump Stations ... 12
2.1.2.1 Location ... 12
2.1.2.2 Design Requirements ... 13
2.1.2.3 Structures ... 13
2.1.2.4 Submersible Pump ... 13
2.1.2.5 Shutoff and Check Valves ... 13
2.1.2.6 Equipment Removal ... 13
2.1.2.7 Electrical Supply and Control ... 14
2.1.2.8 Alarm Systems ... 14
2.1.2.9 Emergency Operation ... 14
2.1.2.10 Ventilation ... 14
2.1.3 Force Mains ... 14
2.1.3.1 Force Main Locations ... 14
2.1.3.2 Force Main Identification ... 14
2.1.3.3 Velocity ... 14
2.1.3.4 Design Volume ... 14
2.1.3.5 Design Pressure ... 15
2.1.3.6 Air Release and Vacuum ... 15
2.1.4 Service Lines ... 15

2.2 Materials of Construction ... 15
2.2.1 General Material Requirements ... 15
2.2.2 Piping ... 15
2.2.2.1 For Gravity Flow Sewers ... 15
2.2.2.2 For Sewage Force Mains ... 15
2.2.2.3 Ductile Iron Pipe ... 15
2.2.2.4 Polyvinyl Chloride Pipe (Maximum 8") ... 15
2.2.2.5 Steel Casing Pipe ... 16
2.2.2.6 Nestable Corrugated Steel Pipe ... 16
2.2.3 Pipe Fittings and Specials ... 16
2.2.3.1 Ductile Iron Pipe ... 16
2.2.3.2 Polyvinyl Chloride Fittings ... 16
2.2.4 Joints and Gaskets ... 17
2.2.4.1 Ductile Iron Pipe ... 17
2.2.4.2 Polyvinyl Chloride Pipe ... 17
2.2.4.3 Transition Joints ... 17
2.2.5 Manholes ... 17

2.2.5.1 Manhole Frames and Covers ... 17
2.2.5.2 Manhole Steps ... 18
2.2.5.3 Concrete Manhole Joints ... 18
2.2.5.4 Manhole Connections to Pipe ... 18
2.2.5.5 Manhole Bedding ... 18
2.2.5.6 Manhole Brick ... 18
2.2.5.7 Mortar ... 18
2.2.5.8 Drop Manholes ... 18
2.2.5.9 Monitoring Manholes ... 18
2.2.6 Service Lines ... 19
2.2.6.1 Service Line Connections ... 19
2.2.7 Pump Stations ... 19
2.2.7.1 Submersible Pumps ... 19
2.2.7.2 Pump Test ... 19
2.2.7.3 Pump Warranty ... 20
2.2.7.4 Documentation ... 20
2.2.7.5 Access Frame and Cover ... 20
2.2.7.6 Controls ... 20
2.2.7.7 High Water Alarm ... 21
2.2.8 Valves ... 21
2.2.8.1 Air Release Valve ... 21
2.2.8.2 Plug Valves ... 21
2.2.8.3 HDL Ball Check Valve ... 21
2.2.9 Valve Vaults ... 22

3. GENERAL CONSTRUCTION REQUIREMENTS ... 22

3.1 General ... 22

3.2 Erosion Control And Sedimentation ... 23

3.3 Clearing And Grubbing ... 23
3.3.1 General ... 23
3.3.2 Clearing ... 23
3.3.3 Grubbing ... 23
3.3.4 Disposal ... 23
3.3.5 Bench Marks and Monuments ... 23

3.4 Traffic Control ... 23

4. WATER SYSTEM CONSTRUCTION STANDARDS ... 24

4.1 Installation Procedures ... 24
4.1.1 General ... 24
4.1.2 Trench Construction ... 25
4.1.2.1 Trench Description ... 25
4.1.2.2 Alignment ... 25
4.1.2.3 Excavation ... 25
4.1.2.4 Trenching ... 25
4.1.2.5 Sheathing and Bracing ... 26
4.1.2.6 Stabilization and Bedding ... 26
4.1.2.7 Excavated Material ... 26
4.1.2.8 Limit of Open Trench ... 27
4.1.2.9 Disposition of Water ... 27
4.1.2.10 Excavation Near Roads and Railroads ... 27
4.1.2.11 Subsurface Obstructions ... 27

4.1.2.12 Embankments ... 28
4.1.2.13 Rock Excavation ... 28
4.1.3 Inspection Before Laying of Pipe ... 28
4.1.4 Pipe Installation ... 28
4.1.4.1 Handling ... 28
4.1.4.2 Laying ... 28
4.1.4.3 Joining ... 29
4.1.4.4 Connections to Existing Mains ... 30
4.1.5 Backfilling ... 30
4.1.5.1 Time ... 31
4.1.5.2 In Non-Traffic Areas ... 31
4.1.6 Highway and Railroad Crossings ... 31
4.1.7 Uncased Bores for Driveways ... 32
4.1.8 Asphalt Concrete Paving Replacement (Where Open Cut is Allowed) ... 32
4.1.8.1 Removal ... 32
4.1.8.2 Excavation and Backfill ... 32
4.1.8.3 Base ... 32
4.1.8.4 Pavement ... 32
4.1.9 Valves and Fittings ... 32
4.1.9.1 Setting Valve Markers ... 32
4.1.10 Plugging Dead Ends ... 32
4.1.11 Pipe Restraint Requirements ... 33
4.1.12 Fire Hydrants ... 33
4.1.13 Services ... 33
4.1.13.1 Service Connections ... 33
4.1.13.2 Service Lines ... 33
4.1.13.3 Setting Meters and Meter Boxes ... 33
4.1.13.4 Cross Connections ... 33
4.1.14 Cleanup and Property Restoration ... 34
4.1.15 Protection of the Work ... 34

4.2 Hydrostatic Testing ... 34
4.2.1 Expelled Air ... 34
4.2.2 Testing Required ... 34
4.2.3 Allowable Leakage Test ... 34
4.2.4 Water for Testing ... 35

4.3 Disinfection of Water Lines ... 35
4.3.1 General ... 35
4.3.2 Notification of Testing ... 35
4.3.3 Amount of Disinfecting Agent Used ... 35
4.3.4 Residual Testing ... 36

4.4 Inspections and Acceptance ... 36
4.4.1 General ... 36
4.4.2 Inspection for Approval ... 36
4.4.3 Stop Work Order ... 36
4.4.4 Acceptance ... 36

5. SEWER SYSTEM CONSTRUCTION REQUIREMENTS ... 37

5.1 Trenching and Excavation ... 37
5.1.1 General ... 37
5.1.2 Trench Construction ... 37
5.1.2.1 Trench Description ... 37

5.1.2.2 Alignment and Grades ... 38
5.1.2.3 Excavation ... 38
5.1.2.4 Trenching ... 39
5.1.2.5 Sheathing and Bracing ... 39
5.1.2.6 Stabilization and Bedding ... 39
5.1.2.7 Bedding Classifications for Ductile Iron Pipe ... 39
5.1.2.8 Bedding Requirements for Polyvinyl Chloride Pipe ... 40
5.1.2.9 Concrete Encasement ... 40
5.1.2.10 Rock Excavation ... 40
5.1.2.11 Limit of Open Trench ... 41
5.1.2.12 Disposition of Water ... 41
5.1.2.13 Excavation Near Roads and Railroads ... 41
5.1.2.14 Subsurface Obstructions ... 41
5.1.2.15 Embankments ... 42
5.1.3 Inspection Before Laying of Pipe ... 42
5.1.4 Pipe Installation ... 42
5.1.4.1 Handling ... 42
5.1.4.2 Laying ... 42
5.1.4.3 Joining ... 43
5.1.4.4 Connections to Existing Manholes ... 43
5.1.5.1 Time ... 44
5.1.5.2 In Non-Traffic Areas ... 44
5.1.6 Highway and Railroad Crossings ... 44
5.1.7 Asphalt Concrete Paving Replacement (Where Open Cut is Allowed) ... 44
5.1.7.1 Removal ... 45
5.1.7.2 Excavation and Backfill ... 45
5.1.7.3 Base ... 45
5.1.7.4 Pavement ... 45
5.1.8 Manhole Installation ... 45
5.1.9 Service Lines ... 45
5.1.10 Sewage Pump Stations ... 45

5.2 Gravity Sewer Testing ... 45
5.2.1 General ... 45
5.2.2 Low Pressure Air Tests ... 45
5.2.2.1 Safety ... 45
5.2.2.2 Preparation of the Test Line ... 46
5.2.2.3 Procedure ... 46
5.2.2.4 Calculation of Test Time ... 46
5.2.2.5 Groundwater Conditions ... 46
5.2.2.6 Retest of Test Section ... 46
5.2.3 Measurement of Infiltration ... 46
5.2.4 Mandrel Test ... 47
5.2.5 Velocity Test ... 47

5.3 Force Mains ... 48
5.3.1 Hydrostatic Test ... 48
5.3.2 Leakage Test ... 48

5.4 Inspections And Acceptance 48
5.4.1 General..... 48
5.4.2 Inspection for Approval 48
5.4.3 Stop Work Order 49
5.4.4 Acceptance 49

1. WATER SYSTEM DESIGN REQUIREMENTS

1.1 General Design Requirements

The following shall establish the general design requirements for both publicly owned and privately owned public water systems serving fifteen (15) or more units, installed, operated, and maintained in the unincorporated areas of City of Fairburn. It shall be understood that these standards reflect the minimum requirements necessary to obtain construction plan approval.

1. The developers shall be required to provide the design and installation of an adequate water supply system through the entire development at no cost to City of Fairburn. The water system shall be designed to provide a minimum of 1,000 GPM to all fire hydrants in the proposed development. When the available flows at the connection point are not in excess of 1,100 GPM, the proposed system should be designed to provide residual pressure to all fire hydrants in the proposed development within 40 lbs. of the residual pressure at the connection point using a calculation flow of 1,000 GPM. Calculated residual pressure shall be a minimum of 20 psi. (Supporting documentation for line sizing will be required.)

2. In the event that water mains are proposed outside street right-of-ways, the water mains shall be installed along the center of easements dedicated to the City. Easements shall be forty (40) feet in width for the duration of construction, reducing to a thirty (30) foot permanent easement thereafter. The easement shall be improved to provide an all weather gravel road. The design of the gravel road shall be submitted indicating plan and profile, drainage, etc. Fence gates shall be provided as applicable to provide complete accessibility.

3. When water mains are extended along existing frontage roads, proposed main thoroughfares to serve a proposed development, the developer shall extend a water main, of a size consistent with the overall Department distribution plan, from the tie-in location to a point along the frontage of the development property and beyond all proposed entrances.

4. All water mains shall be 8 inches in size or larger.

5. Dead end lines shall be minimized by looping of all mains when possible and provided with a flushing device (2.5 ft/sec minimum).

6. Minimum horizontal distance between water lines and sanitary sewer lines, storm sewer lines, and sewer manholes shall be ten (10) feet. Minimum distance for all other underground utilities or structures shall be two (2) feet radius. Vertical separation be at least 18 inches between the bottom of the sewer and the top of the water main. At crossings, the water pipe should be located so both joints are as far from the sewer line as possible.

7. Unless otherwise approved by the Water and Sewerage Department, all creek crossings shall be accomplished by encasing a D.I.P. water main in steel casing and sufficiently blocking each end of the casing to secure its position. The minimum depth from the existing creek bed

to the top of the casing pipe shall be two (2) feet. Valves should be at both ends of the crossing and easily accessible (not subject to flooding). The valve closest to the supply should be in a manhole. Taps should be provided on each end for testing and leak determination.

8. All crossings of existing and proposed paved streets shall be by the bore and jack method, unless approved otherwise prior to installation. A city road shall be open cut only after written permission has been received from the City of Fairburn Water and Sewerage Department. All pipe placed under county roads or underneath new roads shall be DIP encased in steel casing with restrained joint pipe and stainless steel casing spacers as determined by City of Fairburn Water and Sewerage Department. All pipe under roads shall have a minimum cover of four (4) feet from finish grade to top of pipe.

9. Crossings of driveways may be by means of uncased bore or open cut as may be determined by the Water and Sewerage Department. Pipe over 10 inches in diameter shall be open cut unless casing is provided with the bore or approved otherwise prior to installation. Where open cut method is allowed, existing concrete and asphalt driveways shall be sawed and the debris removed prior to trenching. When pipe installation is complete, the driveway shall be backfilled, compacted to 98% standard proctor density, and damaged area replaced with material consistent with the existing driveway within five (5) working days. Driveway installation shall be in accordance with these standards.

10. Tees, crosses, valves, and other necessary fittings shall be provided at all major intersections to provide for future expansion.

11. Magnetic detection tape and tracer wire shall be placed directly over all nonmetal pipe at a maximum depth of 2 feet from finished grade. The 3M Scotchmark locating system shall also be utilized.

12. Fire hydrants serving residential areas shall be located at intervals not to exceed 1,000 L.F. along the street right-of-way and must be located within 500 L.F. of all property improvements, less than 500 L. F. from right-of-way line. Minimum valve opening shall be 5-¼".

13. Fire hydrants serving commercial, industrial, or multi-family residential areas shall be located at intervals not to exceed 500 L. F. along the street right-of-way. Minimum valve opening shall be 5 1/4".

14. Fire hydrants are to be located on the right-of-way line, and shall have a gate valve installed between the main and the fire hydrant.

15. All fire service lines and connections with private fire hydrants, hand hose connections, sprinkler heads, and <u>any other supply including domestic lines</u> shall be required to have an approved backflow prevention assembly in accordance with paragraph 1.2.21 of these standards.

16. Shutoff valves shall be located along the main line at intervals not greater than every 1000 L.F.

17. Shutoff valves shall be located on all branch lines as well as on each side of the branch as close to the intersection as possible.

18. All fittings (valves, tees, crosses, bends, reducers) shall be restrained in a method approved by the Water and Sewerage Department. All fittings shall have a minimum of 1 full joint of DIP extending out of each side of the fitting.

19. Shutoff valves shall be located on each side of all stream crossings within 500' of the stream.

20. Fire hydrants shall be required on all dead end water mains.

21. Each valve 2 inches or larger, except fire hydrant valves, shall have a valve marker 4" square by 4'-0" long with four (4) #2 reinforcing rods placed directly behind the valve. The marker shall be set to leave 18 inches exposed above grade with the word “WATER” stamped into the concrete.

22. Each underground valve shall include a valve box placed vertically to allow operation of the valve. Valve boxes not located in roadways shall have a pre-cast concrete collar placed level around the top for protection.

23. Service lines shall be provided from the water main to each residential lot in the proposed development. Lines shall normally be 3/4" minimum diameter and furnished with curb stops, corporation stops and meter boxes. Meter boxes shall be placed directly over the water main or as directed by GA DOT and installed on a 6" gravel base. Double services will be accepted, if a 1" service line is provided.

24. The Developer of a <u>privately owned public water system</u> shall be required to install an approved meter, meter box and backflow preventer for each residence prior to occupancy.

In addition all fire hydrants in a <u>privately owned public water system</u> shall be tagged in a manner and with a message approved by the Water and Sewerage Department indicating non-department responsibility. These requirements apply to all <u>privately owned public water systems</u> in unincorporated City of Fairburn.

25. Water services for commercial, industrial, or multi-family residential shall be adequate to provide for the specific needs of the installation including adequate fire protection. Backflow prevention devices shall be in accordance with City of Fairburn Water Department requirements.

26. The location of service laterals shall be indicated precisely on drawings and marked in the field by sawing a "W" in the curbing and placing a 2" PVC pipe vertically and adjacent to an iron pin immediately behind the curb or at the edge of the pavement. The 2” PVC pipe should extend 3' above final grade and painted blue as per standardized color. Meter stops shall be placed inside meter boxes at the end of all service lines. Service lines shall also be equipped with the 3M ScotchMark locating system.

27. All temporary and interim water connections connected to Department water sources shall be approved prior to installation. Connections shall be metered and billed in accordance with the rates established by the Water and Sewerage Department.

28. Water mains that are installed crossing or immediately parallel to existing gas lines, sewer lines, or storm drains shall be ductile iron pipe as required by the Water and Sewerage Department and/or the Owner of the affected utility.

29. When roadways and streets are proposed to be constructed over existing water lines, the Developer will be required to relocate the water main and install steel casing pipe as determined by the Water and Sewerage Department.

30. The developer shall be required to ensure that none of the water mains, service lines, and the structures that are going to be connected to these water lines are being located on or in close proximity of an abandoned landfill site or any other site used for waste disposal.

1.2 Materials of Construction

1.2.1 General Material Requirements

All materials shall be as specified herein or approved equal by the City of Fairburn Water and Sewerage Department and/or these standards.

1.2.2 Pipe

1.2.2.1 Ductile Iron Pipe (Required Over 8")

Pipe shall be Pressure Class 350 with slip joints conforming to ANSI Specifications A-21.5, latest designation. Must meet ANSI/AWWA Standard C151.

Pipe shall have an exterior coating of coal tar varnish and an interior cement mortar lining with bituminous seal coat conforming to ANSI A-21.4, latest designation.

The seal coat for the lining shall not impair the potability or impart color, taste, odor, phenols, toxicity, caustic alkalinity, or have deleterious effect to the Water. Each pipe shall bear a mark denoting the class to which it belongs. All pipe shall be manufactured within the limits of the continental United States.

1.2.2.2 Polyvinyl Chloride Pipe (Maximum 8")

Pipe shall be American Water Works Standard AWWA C900 or C909, latest designation, made from compounds meeting standard code designation PVC 1120. Couplings, bells, gaskets and lubricants to be used with PVC pipe shall conform to AWWA C900 or C909 requirements. Pipe shall have ductile iron equivalent outside diameters. Each joint of pipe shall be marked with the nominal size, base material, material code designation, dimension ratio number, AWWA Pressure Class, AWWA designation number, manufacturer's name or trademark, production record code, and seal of the National Sanitation Foundation (NSF) verifying the suitability of the pipe material for potable water service. Gaskets and lubricants shall be of proper size and shape and

suitable for potable water.

At the request of the Water and Sewerage Department, the developer shall furnish manufacturer's affidavit certifying that the pipe meets AWWA C900 or C909, latest designation standards. Of this pipe, only AWWA Pressure Class 150 or greater will be accepted.

All fittings using welded joints shall be factory welded. Solvent cemented joints are not allowed for buried pipes.

1.2.2.3 Steel Casing Pipe

Pipe shall be of steel construction of the size and wall thickness below with lengths called for on the approved plans.

Water Main Size	Casing Size*	Wall Thickness
8"	16"	.250
10"	16"	.250
12"	18"	.312
16"	24"	.375
18"	30"	.375
20"	30"	.375
24"	36"	.500

* Either C900 or C909 CL150 & PC350 Slip Joint DIP Applications with Field Lok Gaskets or approved equal.

Special considerations should be given by developers to additional requirements of Railroads and the Georgia Department of Transportation requirements.

1.2.2.4 Nestable Corrugated Steel Casing Pipe

Pipe shall consist of matching half-round segments of 14 gauge corrugated galvanized steel casing pipe which when assembled, become lengths of full-round corrugated steel pipe. Feasible alternatives will be considered by the Water and Sewer Dept.

1.2.2.4 Water Service Tubing (C901)

HDPE SDR 9 Tubing

Polyethylene Copper Tube Size Water Service Tubing - 2 inches and larger may be used in lieu of copper tubing except as defined below. Pipe shall be manufactured from a PE 3408 resin listed with the Plastic Pipe Institute (PPI) as TR-4. The resin material will meet the specifications of ASTM D3350-02 with a cell classification of PE:345464C. Pipe shall have a

manufacturing standard of ASTM D2737 (CTS). Pipe shall be DR 9 (200psi WPR) @ 73.4 degrees F unless otherwise specified on the plans. The pipe shall contain no recycled compounds except that generated in the manufacturer's own plant from resin of the same specification from the same raw material. All pipes shall be suitable for use as pressure conduits, and per AWWA C901, have nominal burst values of three times the Working Pressure Rating (WPR) of the pipe. Pipe shall also have the following agency listing of NSF 61. The pipe shall be Driscoplex 5100 Ultra-Line or approved equal.

Copper Tubing

Type K copper 2 inches and smaller shall conform to AWWA Specification 7S-CR, ASTM Specifications B-88, and Federal Specification WW-T-799. All service lines from the main to the meter up to 1" shall be copper tubing. Service lines from 1-1/4" up to 3" can be copper tubing or HDPE water service tubing as defined above. Copper Tubing in vaults shall be Type L hard copper.

1.2.2.5 Service Pipe Encasement - See Insert

Service piping encasement installed following curb and gutter construction shall be 2" polyethylene or approved equal. If encasement is placed prior to curb and gutter construction, 2" class 200 PVC will be allowed.

1.2.3 Joints and Gaskets

No lead-tip gaskets shall be used.

1.2.3.1 Mechanical Joint Ductile Iron Pipe

Mechanical joint ductile iron pipe shall be furnished with mechanical joint retainer glands, complete with rings, gaskets, bolts, and joint materials conforming to ANSI A-21.11, latest designation.

1.2.3.2 Slip Joint Ductile Iron Pipe

Gaskets shall conform to ANSI A-21.11, latest designation. Use lubricants and gaskets of proper size, shape, and composition as recommended by the pipe manufacturer.

1.2.3.3 Polyvinyl Chloride Pipe

Pipe shall be furnished complete with push type bell and spigot joints conforming to ASTM D-3139, latest designation. Gaskets shall be elastomeric seals conforming to ASTM F-477, latest designation designed for joining plastic pipe.

1.2.3.4 Polyethylene Service Pipe

Pipe shall be joined in strict accordance with manufacturer's recommendations for the size required.

1.2.4 Pipe Fittings and Specials

1.2.4.1 Specials

Specials shall be short body Class 350 ductile iron conforming to ANSI A-21.1 and A-21.10. Fittings shall be epoxy resin lined and conform to ANSI A-21.11. Ductile iron fitting

shall be as manufactured by the Ductile Iron Company of America, or equal. Fittings and Specials shall be complete with rings, bolts, gaskets, etc., for joints.

1.2.5 Valves

All valves shall meet current AWWA Standards. Valves shall be placed every 1,000 feet and at all intersections of water mains. In areas where customers are widely scattered, valves shall be placed every 2,000 feet. All valves shall be left opening valves.

1.2.5.1 Twelve (12) Inch and Larger Valves

Twelve (12) inch and larger valves shall be Butterfly Type Dresser Style 450, Mueller, Pratt or approved equal for underground service with a two (2) inch square operating nut. Connections shall be mechanical joint with retainer glands.

1.2.5.2 Ten (10) Inch and Smaller Valves

Ten (10) inch and smaller valves shall be Resilient Seat Gate Type Dresser Style 3067-01 Mueller or approved equal for underground service with a two (2) inch square operating nut. Connections shall be mechanical joint with retainer glands.

1.2.5.3 Air Release Valves

Air release valves shall be Vent-O-Mat Series RBX or approved equal with check valve on vent to prevent return of air into water main.

1.2.5.4 Check Valves and Backflow Preventers

Are required in all new construction and shall be in accordance with City of Fairburn Water & sewerage Department requirements.

1.2.5.5 Tapping Sleeves, Crosses and Valves

Tapping sleeves shall be Ford FAST Style stainless steel or approved equal. Crosses and valves shall be mechanical joints and of the proper type for the pipe material to be tapped.

1.2.6 Valve Boxes

Valve boxes shall be of the roadway extension type, of proper length and base size with suitable detachable cover, coated inside and out with a good asphaltum paint. Valve extensions are required on all valves at trench depths greater than six feet. Boxes shall be manufactured of ductile iron, be 5-1/4 inch inside diameter, "Standard Telescopic Valve Box" as manufactured by Griffin Foundry and Mfg. Company, Rome, Georgia, or approved equal. Cover shall be marked "Water" in raised cast letters. All boxes not located in roadway shall have a 24" diameter pre-cast concrete collar placed level around the top for protection.

1.2.7 Fire Hydrants

All fire hydrants shall conform to the requirements of AWWA C502, latest revision for 250 psi working pressure. Hydrants shall be the compression type, closing with line

pressure. Hydrants shall meet Georgia Fire Insurance Commission Standards and Local Fire Department requirements.

Fire hydrants shall be cast iron, bronze mounted, left opening with tamper proof operating nuts and mechanical joint end connections. Hydrants shall have 5-1/4 inch main valve opening, two (2) 2-1/2 inch hose nozzles, and one (1) 4 -1/2 inch steamer nozzle. Hydrants shall have 30 to 36 inches above grade. Hydrants shall be M&H Style 129, or approved equal. All hydrants shall be dry tap, traffic model meeting all AWWA Standard Specifications, conforming to Georgia Fire Insurance Commission Standards. All hydrants shall have a 5-1/4 inch minimum main valve opening.

1.2.8 Service Saddles

Service saddles shall be manufactured by Ford, or approved equal for each specific piping material.

1.2.9 Service Pipe Couplings-All shall be Ford or approved equal as follows:

Size	Ford
3/4"	C44-33
1"	C44-44
2"	C44-77

1.2.10 Corporation Stops

Shall be as follows:

Size	Ford
3/4"	F1000-3
1"	F1000-4
2"	FB1000

1.2.11 Meter Stops

Shall be as follows:

Size	Ford
3/4"	B43-332W
1"	B43-444W
2"	BF43-777W

1.2.12 Meter Coupling/Backflow Preventer

Shall be as follows:

Size	Watts	Ford	Conbraco
3/4"	7-U4-2	BF43	40-3C5-5A
1"	-	HHC 38323	40-105-01
2"	-	HHC 31323	40-108-01

1.2.13 Service Meters

1.2.13.1 House Service Meters

House service meters shall be Badger Recordall Disc series 5/8" with Absolute Digital Encoder register and Itron 100W Series ERT Radio read unit with volume measured in gallons or other City of Fairburn Water and Sewerage Department approved meter.

1.2.13.2 Commercial and Industrial Meters

Commercial and Industrial meter installations shall be dependent upon the industry served, service line size, fire protection, and other factors related to each location. Meters 2" thru 6" in size shall be Badger Commercial Recodall water meter with Absolute Digital Encoder register and Itron 100w Series ERT radio read unit measured in gallons. Meter installations shall be reviewed and approved by the Water and Sewerage Department prior to installation. A certification of meter calibration and test of Backflow Prevention device shall also be provided.

1.2.14 Meter Boxes and Enclosures

1.2.14.1 Residential Meter Boxes

Meter boxes for residential use shall be DFW 1219, with a plastic under-mount lid, made of polyethylene in an oval shape having a nominal lid opening dimension of 19"Lx10"Wx10"H or approved equal. See Details.

1.2.14.2 Commercial and Industrial Meter Enclosures

Commercial and Industrial Meter Enclosures may be Composolite as manufactured by Quazite Corporation or approved equal Composolite. Enclosures shall be rated for no less than 5,000 pounds over a 10" x 10" area and be designed and tested to temperatures of -50°F. Material compressive strength should be no less than 11,000 p.s.i. Covers shall have a minimum co-efficient of friction of 0.5. Boxes shall be stackable for extra depth. Enclosures may also be constructed of reinforced concrete block or poured concrete construction. If block or concrete construction is used, a waterproof, lockable, aluminum access hatch shall be provided. Refer to details.

1.2.15 Manhole Covers, Frames, and Steps

Manhole Covers, Frames, and Steps shall conform to Federal Specifications

NQ-1-652, free from scale, lumps, blisters, sand holes, plugs, or other defects. Covers and Frames shall be tough, strong even grained, Griffin type "R" Nennah, Higgins, or approved equal.

1.2.16 Concrete Manholes

Concrete manholes shall conform to ASTM-C-478, latest designation.

1.2.17 Manhole Joints and Gaskets

Manhole joints shall be "O" ring gaskets. Ring shall be sealed with Igas, Sika

Seal, or equal. Joints shall also be mortar plastered inside and outside.

1.2.18 Pressure Regulators

Pressure regulators shall be Cash-Acme Type, EU Series 3 or approved equal.

1.2.19 Valve Markers

Valve markers shall be pre-cast reinforced concrete, four inches square by 4' long with four #2 reinforcing bars.

1.2.20 Underground Warning Tape

Tape shall consist of 6 plys of Copolymer Film bonded without adhesives. Tape shall be resistant to alkalis, acids, etc., bearing a continuous message "Caution Water Line Buried Below."

1.2.20 Underground Electronic Marker System

All installed water mains shall be appropriately marked using the 3M ScotchMark Electronic Marker System.

1.2.21 Residential Backflow Preventers

Shall be installed on all new residential service lines as specified in paragraph 1.2.12. It shall be installed within the meter box on the customer side of the meter.

1.2.22 Commercial and Industrial Backflow Preventers

Shall be installed on all connections to the Department water main. The backflow prevention device shall generally be a Double Check type. The actual selection of the device to be installed will be approved on a case-by-case basis. The device shall be installed in the meter vault in a separate vault or immediately inside the building served as applicable for the type device (refer to backflow prevention standards).

2. SEWER SYSTEM DESIGN REQUIREMENTS

2.1 General Design Requirements

The following shall establish the design requirements for all sewage collection systems installed, operated, and maintained in the unincorporated areas of City of Fairburn. It shall be understood that these standards reflect the minimum requirements necessary to obtain construction plan approval.

1. In areas which are accessible to Department sewage, the developer shall be required to install a sewage collection system adequate for the estimated tributary population (all areas upstream of the system's discharge point) through the entire development with stub outs to each lot.

2. Minimum horizontal distance between water lines and sanitary sewer lines shall be ten (10) feet. Minimum vertical distance shall be two (2) feet.

3. Creek crossings shall generally be accomplished by encasing the carrier piping in

steel casing and sufficiently blocking each end to secure the pipe. Minimum depth from existing creek bed to top of casing pipe shall be three (3) feet.

4. All crossings of paved streets shall be by the installation of steel casing by the jack and bore method, unless approved otherwise prior to installation. At the discretion of the Water & Sewerage Department engineer or his designate, dependent upon site or specific conditions ductile iron piping may be required as carrier piping.

5. Crossings of driveways may be by means of or open cut or cased bores. The existing concrete and asphalt driving shall be sawed and the debris removed prior to trenching. When pipe installation is complete the driveway shall be backfilled, tamped, and damaged area replaced with material consistent with the driveway as soon as possible. Installation shall be accordance with Section 5 of these standards.

6. The City of Fairburn Water & Sewerage Department reserves the right to require developers to provide the easements, for future use, necessary to install a sewage collection system through the entire development.

7. All grease traps shall contain a Zabel A300 filter or approved equal and will conform to the installation shown in typical details.

8. 3M ScotchMark Locator System shall be used for all sewer mains and sewer laterals. Lateral clean-outs must be placed at the edge of right-of-ways and easements.

9. A manhole or clean-out shall be required at every point where the customers facility connects to the Department system. The exact type and size of structure shall be determined on a case-by-case basis.

2.1.1 Gravity Flow Systems

2.1.1.1 <u>Location</u>

Sewer lines/mains for residential subdivisions shall typically be constructed along the center of the street (along drainage features) with an individual service connection or stub extending from the service lateral to the edge of the right of way of each lot. The services shall be located at elevations and locations compatible with the best service for each lot. When drainage features make it impractical to install sewers within street right of ways, the sewers shall be installed along the center of easements dedicated to the county. Easements shall be forty (40) feet in width for the duration of construction, then reducing to a thirty (30) foot permanent easement thereafter.

2.1.1.2 <u>Design Factors</u>

Sewer systems shall be designed for the ultimate tributary capacity. In determining the required capacities of the sanitary sewers the following factors should be considered:

1. Peak hourly domestic sewage flow;
2. Additional maximum sewage or waste flow from industrial plants;

3. Inflow and groundwater infiltration;
4. Topography of area;
5. Location of sewage treatment plant;
6. Depth of excavation;
7. Pumping requirements;

The design calculation for sewer projects shall accompany plan documents as requested by the Water and Sewerage Department.

2.1.1.3 Minimum Line Sizes

All sewer mains shall be sized to adequately serve the drainage basin where the sewer is located. Gravity sewer mains shall be a minimum of eight (8) inches in diameter. Pipe size shall be based on pipe flowing 50% full. Service laterals shall be six (6) inch diameter or larger in size.

2.1.1.4 Depth

Sewer lines installed from 12 to 18 feet will be considered on a case by case basis at the discretion of the Water and Sewerage Department's engineer or designate. The decision will be made on site or condition specific situations with special consideration given to soil types and potential future use of sanitary sewer easements or right-of-ways.

2.1.1.5 Slope

Sewers shall be installed on a minimum slope of 0.40%. When slopes of twenty percent (20%) or greater are necessary, lines shall be anchored securely with concrete anchors to prevent movement.

2.1.1.6 Manholes

Manholes shall be installed at the end of each sewer main; and at changes in grade, size, or alignment; and at all pipe intersections. Additional control manholes will be required on service line serving commercial and industrial facilities. For observation, sampling and measurement of wastes, such manhole shall be conveniently and safely located. The property owner shall be required to maintain the manhole in a safe and accessible condition at all times. Maximum spacing for manholes shall be 400 feet. Spacing of greater than 300 feet will not be allowed when the slope exceeds ten percent (10%). Cleanouts may be used only when special conditions are approved by the Water and Sewerage Department.

2.1.2 Pump Stations

2.1.2.1 Location

Pump stations shall be located on property purchased or owned by the developer and dedicated to the Department when the construction project is complete. The pump station shall be protected by an eight (8) foot cyclone fence with a three (3) strand barb wire security

extension. The pump station shall be designed and constructed to fully operate during the 100 year flood. Pump stations shall be readily accessible by maintenance vehicles during all weather conditions.

2.1.2.2 Design Requirements

Pumping stations shall be designed for the ultimate tributary capacity. In determining the required capacities of the pumping stations the following factors should be considered:

1. Peak hourly domestic sewage flow;
2. Additional maximum sewage or waste flow from industrial plants;
3. Inflow and groundwater infiltration;
4. Total dynamic head;
5. Location of sewage treatment plant;
6. Pipe friction;
7. Pumping requirements;

The design calculations for all pumping stations shall accompany plan documents as requested by the Water and Sewerage Department. Pumping stations designed for a peak hourly flow of 500 gallons per minute or less shall be submersible type pump stations designed specifically for raw sewage use, including totally submerged operation during a portion of the pumping cycle. When design flows exceed 500 gallons per minute, alternate designs shall be considered. If a divided well type system is required, the City of Fairburn Water and Sewerage Department should be consulted prior to preliminary station design. All pumping stations shall meet the requirements of the latest edition of "Ten State Standards."

2.1.2.3 Structures

Structures for pump stations shall be water tight concrete designed specifically for the intended application.

2.1.2.4 Submersible Pump

Submersible pumps shall be designed for pumping sewage in accordance with Section 2.2.

2.1.2.5 Shutoff and Check Valves

Shutoff and check valves shall be placed on the discharge line of each pump. The check valve shall be placed between the shutoff valve and the pump.

2.1.2.6 Equipment Removal

Provisions shall be made for the removal and replacement of pumps, motors, and other mechanical equipment without dewatering the wet well or disconnecting any piping in the wet well. A jib crane shall be provided to lift heavy mechanical equipment from wet wells as required by the Water and Sewerage Department.

2.1.2.7 Electrical Supply and Control

Electrical supply shall be designed to provide adequate power to pumps, alarm, and other appurtenances. Pumping stations should be provided with a dual power source, either supplied from a second power substation or by an emergency portable generator dedicated to the Department with each pumping station. All electrical supply and control systems shall meet the requirements of the National Electrical Code. A motor control center shall be located outside the wet well and be protected by a Nema 4 enclosure.

2.1.2.8 Alarm Systems

Alarm systems shall be installed in each pump station. The alarm shall be activated in cases of power failure, pump failure, or any cause of pump malfunction. Alarms shall consist of a sound alarm and pole mounted light to notify personnel or area residents of problems.

2.1.2.9 Emergency Operation

Provisions shall be made to connect pump stations to emergency power generation in order to prevent sewage backup. Electrical connection shall be installed as recommended by the Water and Sewerage Department before pump station begins operation.

2.1.2.10Ventilation

Each pump station shall have adequate ventilation.

2.1.3 Force Mains

2.1.3.1 Force Main Locations

Force mains shall be installed in right of ways or along the center of easements dedicated to the county. Easements shall be forty (40) feet in width for the duration of construction, then reducing to a thirty (30) foot permanent easement thereafter. Whenever possible, a ten (10) foot separation between water mains and sewer force mains is to be maintained. The installation of sewage force mains and water mains in a single ditch will not be permitted.

2.1.3.2 Force Main Identification

When PVC force mains are installed, either in right-of-ways or permanent easements, a magnetic detection tape shall be placed within two (2) feet of the ground surface. Detection tape shall be imprinted with "sewer line buried below”. Also the 3M ScotchMark Electronic Marker System shall be utilized for marking the location of buried pipes. An appropriate marker shall be buried at an appropriate depth (within the marker=s detection range) during the pipes installation.

2.1.3.3 Velocity

Force mains shall be designed to flow at a velocity of at least two (2) feet per second when volumes are equal to the ultimate average daily flow.

2.1.3.4 Design Volume

Force mains shall be designed to carry sewage volume at least equal to

the ultimate tributary capacity.

2.1.3.5 Design Pressure

Force mains and fittings shall be designed to withstand all internal and external pressures and surges.

2.1.3.6 Air Release and Vacuum

Automatic air vacuum relief valves shall be installed at locations along the force mains where high elevations may cause air locking.

2.1.4 Service Lines

Minimum Line Sizes	-	6 inches
Depth		Two (2) feet
Slope		1%

2.2 Materials of Construction

2.2.1 General Material Requirements

All materials shall be as specified, or approved equal, by the City of Fairburn Water and Sewerage Department and/or these standards.

2.2.2 Piping

2.2.2.1 For Gravity Flow Sewers

Piping material used for gravity flow sewers, sizes 8" through 12" shall be ASTM 3034, SDR 26 (heavy wall) PVC or PC 350 Ductile Iron coated with “Sewper Coat” with Calcium Aluminate as manufactured by LaRange or approved equal. Material for gravity sewer mains larger than 12" in diameter shall be determined by the Water and Sewerage Department. Ductile Iron Pipe shall be used for depths greater than 12 feet.

2.2.2.2 For Sewage Force Mains

Piping used for pressurized force mains, sizes 4" through 8", shall be AWWA C900 or C909 Pressure Class 150, or PC 350 Ductile Iron Pipe or HDPE. Sizes larger than 8" in diameter shall be PC 350 Ductile Iron Pipe or HDPE.

2.2.2.3 Ductile Iron Pipe

All Ductile Iron Pipe shall be in accordance with the (A.N.S.I. A-21.51 or AWWA Standard C-151) latest revision.

2.2.2.4 Polyvinyl Chloride Pipe (Maximum 8")

Pipe for gravity flow systems shall be ASTM 3034, SDR 26 (Heavy Wall) PVC, latest designation or AWWA C900 or C909.

For force main construction the pipe shall be American Water Works Association AWWA C900 or C909, Class 150 PVC, latest designation.

All PVC Piping shall be made from compounds meeting standard code

designation PVC 1120. Fittings, bells, gaskets, and lubricants to be used with PVC Pipe shall also conform to AWWA C900 or C909 requirements. Each joint of pipe shall be marked with the nominal size, base material, material code designation, dimension ratio number, Pressure Class, designation number, Manufacturer's name or trademark, and production record code. Gaskets and lubricants shall be of proper size and shape and be furnished as required by the pipe manufacturer.

2.2.2.5 Steel Casing Pipe

Pipe shall be of steel construction of the size and wall thickness below with lengths called for on the approved plans.

Water Main Size	Casing Size*	Wall Thickness
4"-6"	12"	.250
8"	16"	.250
10"	16"	.250
12"	18"	.312
16"	24"	.375
18"	30"	.375
20"	30"	.375
24"	36"	.500

* Either C900 or C909 CL150 & PC350 Slip Joint DIP Applications with Field Lok Gaskets or approved equal.

Special considerations should be given by developers to additional requirements of Railroads and the Georgia Department of Transportation requirements.

2.2.2.6 Nestable Corrugated Steel Pipe

Pipe shall consist of matching half round segments of 14 gauge corrugated galvanized steel casing pipe which when assembled, become lengths of full-round corrugated steel pipe.

2.2.3 Pipe Fittings and Specials

2.2.3.1 Ductile Iron Pipe

Specials shall be short body Class 350 Ductile Iron conforming to ANSI A-21.10 and A-21.10. Ductile iron fittings shall be coated with “Sewper Coat” with Calcium Aluminate as manufactured by LaRange, Protecto 401 -or approved equal. When directed by the Water and Sewerage Department, for special connections, bell and spigot ductile iron specials shall be submitted for review.

2.2.3.2 Polyvinyl Chloride Fittings

PVC sewer fittings shall typically be SDR 26. When specific fittings are

unavailable because of manufacturing restrictions, fittings shall conform to the requirements of ASTM D-3034 specification with a minimum wall thickness of SDR 35 as defined in section 7.4.1. Fittings in sizes through 8" shall be molded in one piece with elastomeric joints and minimum socket depths as specified in sections 6.2 and 7.3.2. Fittings 10" and larger shall be molded or fabricated in accordance with section 7.11 with manufacturers standard pipe bells and gaskets. Gaskets shall have a minimum cross sectional area of 0.20 sq. in. and conform to ASTM f-477 specification. PVC material shall have a cell classification of 12454-B or C as defined in ASTM D-1748.

2.2.4 Joints and Gaskets

2.2.4.1 Ductile Iron Pipe

Ductile iron pipe joints shall be mechanical joint to ANSI A-21.11 SA A-21.11 latest designation. Gaskets shall be suitable for use in contact with sewage.

Lubricants and gaskets of proper size, shape, and composition shall be used in strict accordance with the manufacturer's recommendations.

2.2.4.2 Polyvinyl Chloride Pipe

Pipe shall be furnished complete with push type bell and spigot joints conforming to ASTM D-3139, latest designation. Gaskets shall be elastomeric seals conforming to ASTM F-477 latest designation designed for joining plastic pipe.

2.2.4.3 Transition Joints

The transition between sewer pipes of different materials shall be made by either concrete collars or by special adapters made for that purpose. The transition between clay pipe and cast or ductile iron pipe shall be by a rubber coupling with ring adapters and stainless steel bands as manufactured by Mission, Fernco, or equal. Adapters between ductile iron pipe and pipe of materials other than clay must be accepted by the Water and Sewerage Department prior to installation. All couplings for joining dissimilar materials must comply with ASTM specification leakage limitations in accordance with paragraphs 33.94 and 33.95.

2.2.5 Manholes

Manholes shall be of pre-cast concrete construction meeting specification ASTM C-478, latest designation or fiberglass. Minimum inside diameter shall be four (4) feet with a minimum access diameter of 22 inches. All manholes shall be watertight.

2.2.5.1 Manhole Frames and Covers

Manhole frames and covers in non flood plain areas shall be ASTM A4B Class 30 Heavy Duty Ductile Iron, Traffic Rated, as manufactured by Vulcan Foundry Corp. or approved equal. Frames shall be free from scale, lumps, sand holes, plugs or other defects. Minimum frame opening shall be 22-1/2 inches. In flood plain areas, the frame and cover shall be of watertight design. See details.

2.2.5.2 Manhole Steps

Manhole steps shall conform to the applicable provisions of ASTM Specification C478, latest edition, or equal. Manhole steps shall be factory built into the pre-cast sections. Steps shall be aligned during installation.

2.2.5.3 Concrete Manhole Joints

Manhole joints shall be "O" ring gasket, lock joint gasket suitable for use with sewage of Igas, Sika Seal, or equal. Manhole interior and exterior joints and walls shall be sealed using a grout mixture as specified elsewhere herein.

2.2.5.4 Manhole Connections to Pipe

Connections to piping at the manhole shall be completed by using a rubber flexible sleeve (boot) designed to be used for this purpose unless otherwise approved by the Water and Sewerage Department. The sleeve size shall be as manufactured for the specific size and pipe material installed.

Connections to existing manholes shall be accomplished by coring of the existing manhole and installation of a flexible boot as specified.

2.2.5.5 Manhole Bedding

Manholes shall be bedded on a foundation of #57 crushed stone, 12 inches thick.

2.2.5.6 Manhole Brick

Brick used for any reason during manhole installation shall be best grade hard burned common brick. Absorption shall not be more than ten percent (10%) of their weight in water when submerged twenty-four (24) hours.

2.2.5.7 Mortar

Mortar shall consist of one (1) part Portland Cement and three (3) parts sand conforming to the following specifications:

A. Portland Cement.

B. Sand - Clean, sharp, and well graded; free from clay, loam, or organic matter; pass a 1/4" screen.

C. Water - Clean, free from vegetable, sewage, or organic matter.

2.2.5.8 Drop Manholes

All drop manholes shall be outside drop. No inside drop of any depth over 0.1 feet shall be allowed. The incoming sewer shall be within 0.1 feet of the outgoing sewer. Outside drop manholes shall be constructed in conformance with typical detail.

2.2.5.9 Monitoring Manholes

When specifically required by the Water and Sewerage Department,

monitoring manholes shall be provided for commercial or industrial discharges to provide means of sampling and flow monitoring. Specific requirements will be established on a case-by-case basis.

2.2.6 Service Lines

Service lines shall be a minimum of 6-inch diameter and of the materials specified previously for sewer mains.

2.2.6.1 Service Line Connections

Service line connections to sewer mains shall be completed by using a tee or a wye installed along the sewer main. The tee or wye shall be of a material designed for this purpose and accepted by the Water and Sewerage Department. Services shall extend from the sewer main to the property line of each lot. Location of service line ends shall be indicated precisely on drawings and marked on the site by placing 2" PVC pipe placed vertically and extending 3' above final grade and painted green as per uniform/conventional marking for S.S. New tees shall be installed on existing lines. All connections should be watertight and not protrude into sewer.

2.2.7 Pump Stations

Pumping stations should be capable of maintaining a pumping rate of 2 foot/sec. velocity in force main. Pumping stations should utilize baskets.

2.2.7.1 Submersible Pumps

Submersible pumps, electrical cables, and accessories shall be manufactured by Flygt Corporation unless otherwise approved by the Water and Sewerage Department.

2.2.7.2 Pump Test

The pump manufacturer shall perform the following inspections and test on each pump before shipment from factory:

1. Impeller, motor rating and electrical connections shall first be checked for compliance to the customer's purchase order.
2. A motor and cable insulation test for moisture content or insulation defects shall be made.
3. Prior to submergence, the pump shall be run dry to establish correct rotation and mechanical integrity.
4. The pump shall be run submerged, a minimum of 6 feet under water.
5. After operational test No. 4, the insulation test (No. 2) is to be performed again.

A written report stating the foregoing steps have been done shall be supplied with each pump at the time of shipment.

2.2.7.3 Pump Warranty

The pump manufacturer shall warrant the units being supplied to the owner against defects in workmanship and material for a period of five (5) years or 10,000 hours under the Municipal Wastewater-Permanent Installation Warranty Policy under normal use, operation and service.

2.2.7.4 Documentation

The Developer, shall supply up to five (5) sets of standard Submittal Drawings, Operating and Maintenance Instruction Manuals and Parts Lists.

Standard submittals will consist of:

a). Pump Outline Drawing

b). Control Data

c). Access Frame

d). Typical Installation Guides

e). Technical Manuals

f). Parts Lists

2.2.7.5 Access Frame and Cover

Provide aluminum frames and covers manufactured with 1/4" thick, one piece aluminum extruded frame, with a continuous concrete anchor as part of the one piece extrusion. The door panels shall be 1/4" thick aluminum diamond plate, designed to withstand a live load of 60 lbs. per square foot, with a safety factor of times 3. The doors shall be provided with stainless steel hinges with tamper-proof fasteners. All hardware shall be stainless steel. The doors shall open to 90°, lock automatically in that position with a stainless steel positive locking arm and a stainless steel release handle. Doors shall be provided with a stainless steel lifting handle, stainless steel locking bar, or stainless steel snap-lock with removable key handle. The doors will close flush with the top of the frame, resting on a 1/2" wide lip around the entire inside of the frame for added support. Guide bars shall be of at least standard weight galvanized steel pipe.

2.2.7.6 Controls

Provide an automatic pump control center in Nema 4 enclosure for each pump station installation. For each pump motor, there shall be included: A combination circuit breaker/overload unit providing overload protection, short-circuit protection, reset and disconnect for all phases; across-the-line or reduced voltage starter; hand/off/automatic pump operations selector switch; 120 volt control panel pilot circuitry. A 24 volt control circuit transformer with disconnect circuit breaker and overload protection, for external pilot circuitry shall be included with an automatic electric alternator for two pump stations (providing alternating operation of pumps under normal conditions, or in cases of high level, allowing both pumps to operate simultaneously). Pumping stations shall have three step

autotransformer reduced voltage connected at the 50% tap.

Each enclosure shall also include one (1) manual transfer switch for operation on a portable standby power supply which shall be connected by means of a weather-tight connection through the enclosure wall. Furnish one male connection compatible with all pumping stations to be connected to standby power cable.

A grounding type convenience outlet shall be provided on the side of the enclosure for operation of 120 volt, 20 amp, A.C. devices protected by a ground fault breaker.

2.2.7.7 High Water Alarm

Furnish and install a high water alarm horn and light that will sound and flash when the water level in the wet well reaches a high level condition. In the event the high level recedes, the horn will cease sounding, and the light will continue to flash to show that there has been such a condition, until the reset is activated in the control center. The unit shall be factory constructed on a suitable mounting panel. The unit shall consist of a loud audible horn or bell with manual adjustment for pitch; a flashing red, including a 100 watt bulb, red vapor proof globe and guard; and a Watertight Control Center with horn silencer and reset and test switches.

2.2.8 Valves

2.2.8.1 Air Release Valve

Air Release Valves shall be of the type that automatically releases air, gas, or vapor under pressure during system operation. The valves shall have a 3" NPT inlet with a 1/2" NPT outlet and a 3/16" venting orifice for a maximum working pressure of 150 p.s.i.. Valves shall be constructed of cast iron body and cover, stainless steel trim and float, with an adjustable viton orifice button to insure positive seating. Back wash accessories shall be furnished and assembled to the valve, consisting of an inlet shut-off valve, blow-off valve, clear water inlet valve, rubber supply hose and quick disconnect couplings. Air release valves shall be equal to Apco 401 Sewage Valve #142 air and vacuum valve. Air release valves shall be installed prior to filling.

2.2.8.2 Plug Valves

Eight-inch and smaller valves shall be Dresser X-Centric, DeZuric, ACF, or equal, with 100% (percent) opening.

Ten-inch and larger valves shall be Dresser X-Centric, DeZuric, ACF, or equal, with worm gear operator and 100% (percent) opening.

Furnish three-foot long "T" type operating wrench for valves installed.

2.2.8.3 HDL Ball Check Valve

Furnish and install Flygt HDL Ball Check Valve. The valve shall consist of just three (3) components; body, cover and ball (one moving part). The design of the valve shall be such that it keeps solids, stringy material, grit, rags, etc., moving without the need for back flushing. In

the operating mode, the ball shall not impede flow through the valve. The operating flow area shall be equal to the nominal size of the valve. There shall not be outside levers, weights, springs, dash pots or other accessories required for a swing (clapper) type check valve. The ball shall be hollow steel with an exterior of nitrile rubber, it shall be resistant to grease, petroleum products, animal and vegetable fats, diluted concentrations of acids and alkalines (ph 4-10), tearing and abrasion. The body and cover shall be of gray cast iron. Flange drilling shall be according to AISI B16.1, Class 125.

2.2.9 Valve Vaults

Valve vaults shall be provided to house valving outside of submersible pump station wet wells. Check valves, gate or plug valves, duplex discharge transition to the forcemain, and a pressure gage shall be installed within the valve vault. The valve vault shall be of precast or poured-in-place reinforced concrete. Access shall be by an aluminum hatch, hinged and hasped, minimum size 30 inches square.

3. GENERAL CONSTRUCTION REQUIREMENTS

3.1 General

The following shall establish the general construction requirements for the installation of all water and sewer piping and pumping facilities as well as clearing and grubbing of right-of-ways and easements, and paving and grassing of areas behind curb lines as required for installation, maintenance, and repair of water and sewer systems in unincorporated areas of City of Fairburn.

It shall be understood that these standards reflect the minimum requirements necessary for final acceptance of the utility by the water and Sewerage Department.

1. It shall be the responsibility of the Developer to notify all utility companies prior to any excavation.

2. The Developer shall notify the City of Fairburn Water and Sewerage Department forty-eight (48) hours prior to beginning construction. This department may request a pre-construction conference with the Developer and his Contractor before beginning construction.

3. All construction shall be subject to inspection by authorized representatives of the Water and Sewerage Department at any time, and at their request no dirt cover shall be placed on any portion of completed water or sewer system until it has been inspected and approved by the Water and Sewerage Department Inspector.

4. It shall be the responsibility of the Developer to coordinate all construction and insure that these standards are adhered to. Any work not meeting these standards shall be corrected immediately by the Developer, after notification by the City Water and Sewerage Department Representative. Should the work not be corrected after verbal notification, a written stop work order shall be issued by the Water and Sewerage Department until the deficiencies have been corrected.

3.2 Erosion Control and Sedimentation

3.2.1 General

Developer shall be responsible for maintaining proper control measures on the construction site and adjacent areas for the duration of the project. Sediment control barriers, temporary sediment traps, sediment basins, grass, mulch, etc., as will be required to adequately control erosion and prevent sedimentation. All materials and measures shall be in accordance with procedures of the State Soil and Water Conservation Committee *A Manual for Erosion and Sediment Control in Georgia*.

3.3 Clearing And Grubbing

3.3.1 General

The clearing and disposal of all trees, bushes, shrubbery, and miscellaneous debris as outlined in project plans and specifications shall be the sole responsibility of the Developer subject to the approval of the City of Fairburn Water and Sewerage Department.

3.3.2 Clearing

Clearing operations shall be performed so as to prevent damage to existing trees and other property located on property other than that of the Developer. Safety of employees and others should be considered throughout the operation. No clearing should be performed on property not owned by the Developer without first obtaining written permission from the Owner.

3.3.3 Grubbing

It shall be the responsibility of the Developer to remove all debris from fill material in areas to be excavated, areas to be stripped of topsoil, and areas to receive fill.

3.3.4 Disposal

All cleared, and grubbed material shall be disposed of in a manner satisfactory to the Water and Sewerage Department. Burning shall not be allowed, unless specifically permitted by the County Fire Marshall.

3.3.5 Bench Marks and Monuments

All established bench marks, property pins, monuments, and other reference points shall be maintained; if destroyed or disturbed, they shall be replaced as directed by the Water and Sewerage Department.

3.4 Traffic Control

The Developer shall conduct his operations so that there will be a minimum of interference with or interruption of traffic upon and of the roadway. This applies to both the initial installation and the continuing maintenance and operation of facilities. Whenever construction is conducted along a highway, utility construction signs shall be provided at 1,500 feet, 1,000 feet, and 500 feet along the effected roadway prior to construction. In the case of single lane closings, a flagman shall

also be provided on each side of the construction site to direct traffic. Lane closings shall not be permitted without prior approval of the Water and Sewerage Department. Traffic cones shall also be placed, along the closed lane, at a distance, in feet, not to exceed the maximum speed limit, in miles per hour, of the effected roadway. Road closings shall be protected by effective barricades, and obstructions shall be lighted during hours of darkness, Flagmen and suitable warning signs shall be provided as may be required to properly control and direct traffic. Safety of both motorists and the General Public, shall be provided at all times.

4. WATER SYSTEM CONSTRUCTION STANDARDS

4.1 Installation Procedures

4.1.1 General

The following shall establish the general construction requirements for the installation of water distribution systems, installed, operated, and maintained in the unincorporated areas of City of Fairburn. It shall be understood that these standards reflect the minimum requirements necessary for final acceptance of the utility by the Water and Sewerage Department.

1. It shall be the responsibility of the Developer to notify all utility companies prior to any excavation. Any pipe, solder or flux used in the installation or repair of water service lines or water mains must be lead-free. Pipe and fittings must not contain more than 8.0% lead and solders and flux must not contain more than 0.2% lead.

2. The Developer shall notify the City of Fairburn Water and Sewerage Department forty-eight (48) hours prior to beginning construction. This department may request a pre-construction conference with the Developer and his Contractor before beginning construction.

3. All construction shall be subject to inspection by authorized representatives of the Water and Sewerage Department at any time, and at their request no dirt cover shall be placed on any portion of installed facilities until it has been inspected and approved by the Water and Sewerage Department Inspector.

4. It shall be the responsibility of the Developer to coordinate all construction and insure that these standards are adhered to. Any work not meeting these standards shall be corrected immediately by the Developer, after notification by the City Water and Sewerage Department Representative. Should the work not be corrected after verbal notification, a written stop work order shall be issued by the Water and Sewerage Department until the deficiencies have been corrected.

5. All work performed in excavations shall be conducted in such a way as to ensure the safety of the workers is maintained. Safe practices should conform to OSHA regulations for working in confined spaces especially as they pertain to excavations and the protective systems they require.

4.1.2 Trench Construction

4.1.2.1 Trench Description

Trench may be open cut from the ground surface where designated on the plans or approved by the Water and Sewerage Department. Boring may be required to protect certain surface improvements and to satisfy requirements of the Georgia Department of Transportation and/or the railroad companies. Minimum width shall be the nominal diameter of the pipe plus twelve inches and minimum cover on pipe shall be 48 inches. Bottom of the trenches shall be hand dressed so that the pipe has even bearing on solid undisturbed earth throughout its entire length between bell holes. Bell holes of sufficient size for making perfect joints shall be provided. Changes in grade shall be gradual.

4.1.2.2 Alignment

Alignment shall be as indicated on the approved plans. When an obstruction is encountered, make necessary changes in alignment or grade as approved by the Water and Sewerage Department. Injury or damage to adjacent structures, water, sewer, gas line, or other utilities should be avoided.

4.1.2.3 Excavation

Excavation shall consist of removing earthwork for the satisfactory placement of water mains and appurtenances. This includes vegetation, brush and debris, soil, rock, pavements, etc., for the intent and purpose of constructing the work to required lines and grades, including sheathing, bracing and dewatering of excavations, trench bed stabilization, and such other incidentals necessary to comply with plans and specifications.

Plans direct sections where jack and bore methods are required under certain pavements and/or railroads.

4.1.2.4 Trenching

Except as specified for jack/bore procedures under pavements and railroads, all excavation shall be made by open cut, unless otherwise authorized by the Water and Sewerage Department. All work within right-of-way of railroads and state highways, shall be subject to an approval permit for construction (processed through the Owner), and all rules and regulations of those authorities shall be required. It shall be the responsibility of the developer to prepare the applications for the required permits.

It is preferable that all trenching be done by a trencher made specifically for such purposes, however, a backhoe or other equipment will be acceptable.

Where excessive excavation results, the Contractor shall construct special foundations or use special backfill methods. Overdepth excavation will be required to remove material unsuitable to support the pipe.

4.1.2.5 Sheathing and Bracing

When trench sides must be kept as nearly vertical as possible, it may be necessary to sheath, brace, or support trench sides.

When trench depth excavation exceeds five (5) feet, sheathing and bracing shall be required to protect the pipe crew from injury, irrespective of the visible judgement of soil conditions by the Contractor. In event the sheathing cannot be removed without injury to the pipe of adjoining structures, it shall be left in place or cut, and the upper part then removed. All trenching, sheathing, bracing, side sloping, etc., shall conform to the regulations of the Occupational Safety and Health Administration of the U. S. Department of Labor (OSHA). Side sloping in accordance with OSHA regulations is acceptable where conditions permit. It shall be the responsibility of the Contractor to insure that all safety measures are met.

4.1.2.6 Stabilization and Bedding

Subgrade stabilizer is to be used where required by the Water and Sewerage Department. In soft ground, quicksand, or in areas where soil conditions are such that pipe alignment, or grade is endangered, the trench shall be excavated below grade and then brought back to grade with stone stabilizer material. Stone stabilizer material shall be A.S.T.M. #57 crushed stone. Depth of stone shall be 6 inch min. or as directed by the Water and Sewerage Department.

4.1.2.7 Excavated Material

All excavated material shall be placed on one side of the trench in a manner to prevent blockage of surface drainage patterns and traffic. It shall be so placed as to not endanger the work, allowing at all times free access to the trench, and all existing utilities publicly or privately owned, particularly fire hydrants.

Where necessary, wood fencing or retainers shall be erected to retain the excavated material within narrow limits to prevent obstruction of traffic and/or encroachment upon pavements or other areas restricted by property owners. Included shall be protection of hedges, walls, flower/rock gardens, shade trees, fruit trees, and vegetable gardens. Satisfactory provisions shall be made for travel on sidewalks, crosswalks, streets, railroads, bridges, private ways, railings, barriers, etc. All drains, gutters, culverts, and sewers for surface drainage shall be kept open, or if it is evident they must be temporarily closed then all requirements of the Owner must be met prior to such closing. Excavated material shall not, in any case, be placed upon the pavement surfaces of public roads or streets, owned by the city, county or state, unless prior approval is given by the proper Department having jurisdiction. In periods between dusk and daylight, and during inclement weather when visibility is limited, caution lights and barricades shall be placed at each end and along the excavated material. Each building, wall, fence, pile, bridge, railroad, sidewalk, driveway, tree, lawn, garden, or any other improvement encountered is to be properly protected from injury. In event of damage during the work,

prompt repairs satisfactory to the Water and Sewerage Department and the property owner shall be made by the Contractor.

4.1.2.8 Limit of Open Trench

The length of the trench to be opened or the area of surface to be disturbed and restored at any one time shall be limited to that which the Contractor can complete in one day's work, or less in event of apparent inclement weather, or not to exceed 100 feet.

It shall be the Contractor's responsibility to provide adequate barricades, warning signs, flagmen, flashing lights, etc., as necessary to safeguard the public. All trenches must be backfilled by the close of each work day.

4.1.2.9 Disposition of Water

Keep trenches free of water. The Contractor shall furnish all equipment and labor necessary to remove any water found or accumulated in the trench. Other excavation shall be kept clear of water while pipe is being laid or concrete or masonry is being placed. No pipe shall be laid in water and water must not be permitted to flow over or rise upon any masonry or pipe until the work has been accepted to prevent flow-in of silty water and thus prevent buildup of foreign matter in the pipe. All water pumped or bailed from the trench or other excavation must be conveyed in an acceptable manner to a suitable point of discharge, i.e. a stream or ditch, where it shall not cause injury to public health, or public or private property, or to work under construction or previously completed or to the street surfaces, or to cause interference with the use of streets by the public.

4.1.2.10 Excavation Near Roads and Railroads

Special care must be exercised in trenching near roads and railroads to protect against collapsing of the roadbed structure. Each situation must be evaluated on account of varying soils. Where excavations encroaching at or near roads and/or railroads will be limited because of scheduled jack/bore methods required for installations under roads and/or railroads, the trench excavated shall be halted at least ten (10) feet from the pavement edge of a road, or more if soil conditions so indicate, and no nearer than twenty-five (25) feet from the centerline of the railroad track nearest the excavation as measured at 90 degrees (right angles) to the railroad.

4.1.2.11 Subsurface Obstructions

In excavating, backfilling and laying pipe care must be taken not to remove, disturb or injure any water, sewer, gas, electric, telephone, or other conduits or utilities without prior approval of the owner of the utility encountered, including private utilities.

If necessary in order to perform the intended work, the Contractor shall sling, shore up, and maintain such utilities in operation, and promptly repair any damage done to them. Before final acceptance of the work, all such utilities shall be made "equal to or better" than prior to construction.

It shall be the Contractor's responsibility to locate underground utilities. In event of damage to the utilities, the Contractor will promptly notify the utility owner (private or public) and must assume full responsibility therefore.

In event pipe or conduits providing service to adjoining buildings are broken, or damaged to some questionable degree of service, the Contractor shall immediately make repairs at his own expense, or be otherwise liable for repair costs incurred by others. The utility owner reserves the right to make repairs, caused by the Contractor, without prior notice. Removal or relocation of a utility encountered may be done upon prior approval by the utility owner given directly to the Contractor.

4.1.2.12 Embankments

Whenever the water main is to be installed in a fill area, the Water and Sewerage Department will require the installation of ductile iron pipe.

4.1.2.13 Rock Excavation

Remove rock to 6 inches below grade of trench and build back trench bottom with suitable material tamped into place.

When necessary, blasting operations shall be conducted in strict accordance with all existing ordinances and regulations. Blasting shall be conducted by persons licensed to use explosives.

Where blasting is to be conducted along the right-of-way of a state claimed roadway, the Developer shall provide the Water and Sewerage Department all necessary information to submit blasting permit applications to the Georgia Department of Transportation for approval. Blasting may be conducted only after this permit is received.

4.1.3 Inspection Before Laying of Pipe

Before any pipe is laid in the trench, the pipe shall be subject to inspection. Only first quality pipe with smooth surfaces (interior and exterior), free from cracks, flaws, blisters, etc., shall be used. Pipe contaminated with dirt deposits shall be cleaned prior to installation in the trench.

4.1.4 Pipe Installation

4.1.4.1 Handling

Pipe shall be carefully unloaded with a pipe unloader or crane.

4.1.4.2 Laying

Pipe shall be swept clean of trash or dirt before lowering into the trench. After the pipe has been cleaned it shall be lowered into the trench in such a manner that the pipe shall not be damaged. Each joint shall then be lined and brought to a uniform grade upon a solid trench bottom. Bell holes for couplings or bell shall be prepared with a minimum clearance of two inches. Pipe shall be laid in straight lines on uniform grades and shall not be deflected either vertically or horizontally in

excess of that recommended by the manufacturer. Pipe shall be installed below pavement.

Before stopping work each day all open pipe ends shall be closed with a proper size plug. Protect pipe from floating.

4.1.4.3 Joining

4.1.4.3.1 Mechanical Joints

Clean spigot and bell of foreign material and apply a prepared lubricant solution before slipping gasket and gland over spigot end of pipe. Small side of gasket and lip of gland must face the socket. Paint gasket with lubricant solution and place spigot end of pipe securely home in socket. Push gasket evenly into position in socket, slide gland into position and tighten bolts with fingers.

Tighten bolts with a torque wrench to recommended tightness by tightening bottom bolt and then top bolt. Thereafter, all bolts shall be tightened in sequence of 180° apart until all bolts are within the range of torque recommended by the manufacturer. If effective sealing is not accomplished, disassemble and reassemble after thorough cleaning.

4.1.4.3.2 Slip Joints

Jointing shall be made with rubber gaskets and lubricant furnished by the manufacturer in strict accordance with the manufacturer's recommendations. Prepare field cut pipe by filing 1/8 inch 30° bevel on pipe end to avoid injuring gasket.

4.1.4.3.3 Threaded Pipe

Wire brush threads clean and apply an approved joint compound. Tighten until joint is snug and watertight.

4.1.4.3.4 Polyvinyl Chloride Pipe

Pipe shall be American Water Works Standard AWWA C900 or C909. Do not thread PVC pipe; when connections to existing threads are necessary, adaptors will be used. Use strap wrenches to couple threaded PVC pipe fittings and use lubricant recommended by pipe manufacturer.

Avoid excessive torque and do not score pipe. Use couplings furnished with pipe for fittings and install in strict accordance with the manufacturer's recommendations.

4.1.4.3.5 Polyethylene Pipe

All connections shall be in accordance with manufacturer=s recommendations.

4.1.4.3.6 Nestable Corrugated Steel Casing Pipe

Construct trench approximately 12 inches wider than the diameter of the pipe to be installed. Round bottom of trench to conform to the shape of the pipe.

Remove large stones and other obstructions. Do not excavate more material than necessary. If excavation is made in unstable soil, place a 12-inch layer of gravel in trench bottom. Assemble pipe casing in strict accordance with manufacturer's recommendations.

4.1.4.3.7 Restrained Joints

All restrained joints shall be installed in strict accordance with manufacturer's recommendations.

4.1.4.4 Connections to Existing Mains

Connections to existing mains shall be made at the locations shown on the plans or as directed by the Water and Sewerage Department. No connections shall be made without first submitting the name and references of the Contractor performing the work for approval by the Water and Sewerage Department. After Contractor approval, connections may be made forty-eight (48) hours after notice is given to the Water and Sewerage Department.

When existing gate valves on the distribution system must be shut off in order to make connections, this work will be done by the Developer with approval of the Water and Sewerage Department. Shut-offs will be made at such time as will be convenient to the greatest number of customers affected.

When an existing main has been cut or a plug removed for a connection, the work of making a connection shall proceed without interruption until complete.

Connections to existing mains shall be governed by all applicable provisions of these specifications. The Developer shall locate, excavate and cut the existing main, remove the section of old pipe, rework the trench, connect the new pipe with the old and set necessary specials and valves as shown on the approved plans. All necessary precautions shall be taken to brace valves and mains under pressure to prevent blow outs.

Where new construction is required over existing piping, a steel reinforced grade beam at least 4 feet wide and 2 feet deep is required.

4.1.5 Backfilling

The trench shall be backfilled with loose native earth free of clods, large stones, debris, or other objectionable material.

In traffic areas, particularly roads and streets, parking lots and walkways, the full depth of backfill shall receive thorough tamping in 6 inch layers to a minimum of 98% standard proctor density. The Water and Sewerage Department may request that soil compaction test be performed by an outside testing consultant. The developer will be responsible for payment to the testing consultant. Particular attention is directed to driveways and walkways, and areas subject to mail delivery where prompt backfilling is required to prevent inconvenience to the public.

In all areas of construction, the excavated material shall be cleared from the

premises and the completed work left in a neat and acceptable condition. Included are such items as broken pavement and other matter not classified as earth.

Trenches and other excavated areas completed by the Contractor shall be kept in a good and safe condition during a one year maintenance period following acceptance by the Water and Sewerage Department and regulatory agencies.

4.1.5.1 Time

Trenches shall be backfilled as soon as practical after laying and jointing the pipe. Provisions for traffic as specified under "Excavated Material" must be adhered to.

4.1.5.2 In Non-Traffic Areas

Carefully refill with suitable material in layers not exceeding 6 inches in thickness and thoroughly tamp with mechanical tamps to one foot above the top of the pipe. The remainder of the trench may be backfilled without tamping with the exception of areas around valves and fire hydrants which require tamping as specified under the installation of those items. The backfill shall be rounded over the trench to provide allowance for future backfill settlement.

4.1.6 Highway and Railroad Crossings

Install in strict accordance with railroad or State Highway requirements and all applicable provisions of the plans and specifications. See Detail

Perform no work until satisfactory arrangements have been made with the State Highway Department or railroad.

Install casing pipe by jacking, boring or tunneling in strict accordance with the requirements of the Georgia Department of Transportation and FHWA or railroad; diameter of the hole shall not exceed the outside diameter of the pipe.

Cement grout shall be pumped around pipe where voids were developed during the installation operation.

Casing pipe shall be steel as previously specified and joints shall be welded. Carrier pipe shall be ductile iron with mechanical joints as previously specified. Welds shall be filled arc weld type performed only by qualified welders, meeting American Welding Society, and American Institute of Steel Construction Standards. Welds shall be continuous, watertight, and develop a greater strength than the pipe.

Install on required grade. Inside and outside of welds shall have all rust, mill scale, flux flumes, oxides, grease and oil removed by chipping and wire brushing immediately before applying touchup coating.

All weld areas and areas where coating has been scratched shall be recoated with coal tar material of same type and thickness as original coating. Outside shall be coated immediately after welding.

Carrier pipe will be pushed into casing on wooden skids to avoid damaging coating in casing.

Seal ends of casing in accordance with Georgia Department of Transportation or railroad requirements.

4.1.7 Uncased Bores for Driveways

Uncased bores for lines under paved driveways shall be in strict accordance with State Highway requirements and all applicable provisions of the plans and specifications.
Shore, brace and maintain all safety measures to avoid danger or damage.

4.1.8 Asphalt Concrete Paving Replacement (Where Open Cut is Allowed)

Materials and construction methods shall conform to the Georgia State Department of Transportation Standard Specifications, latest edition, and typical details of these standards.

4.1.8.1 Removal

Existing pavement shall be sawed.

4.1.8.2 Excavation and Backfill

Excavation and backfill shall be in accordance with this Section.

4.1.8.3 Base

Base shall be 8 inches of "High Early Strength" concrete in accordance with Section 430 of the Georgia Standard Specifications for Construction of Roads and Bridges.

4.1.8.4 Pavement

Pavement shall be hot mix asphaltic concrete either Type "E" or "F", and shall be in accordance with Section 400 of the Georgia Standard Specifications for Construction of Roads and Bridges.

4.1.9 Valves and Fittings

Shall be placed as shown on the approved plans or directed by the Water and Sewerage Department. See Detail W-17. Valves shall be set plumb and on firm bearing. Valves 12 inches and larger installed on ductile iron pipe shall be complete with mechanical joint retainer glands. All valves and fittings shall be secured with a method of restraint approved by the Department. Valve boxes shall be set plumb and the top of the box brought to the surface of the ground or pavement.

4.1.9.1 Setting Valve Markers

Set vertically in ground with 18 inch projecting. Locate as directed by Water and Sewerage Department.

4.1.10 Plugging Dead Ends

All dead ends of pipes, tees, or crosses shall be plugged or capped. Installation of plugs or caps shall be as specified for similar pipe and fittings. A fire hydrant assembly shall be

installed on the end of the pipe as directed by the Water and Sewerage Department.

4.1.11 Pipe Restraint Requirements

All bends, tees, ends of mains, and crosses shall be restrained as indicated on the plans or as directed by the Water and Sewerage Department. All restrained joints shall conform to manufacturer's recommendations.

4.1.12 Fire Hydrants

Shall be located and installed as shown on the plans or as directed by the Water and Sewerage Department, and set plumb from 30 to 36 inches of hydrant exposed above the ground. Developer will furnish adjustable anchor couplings as required to maintain these dimensions. Hydrant extension kit will only be allowed if approved by City of Fairburn Water & Sewerage Department prior to installation.

Foreign matter shall be removed from the interior of hydrants, stuffing boxes tightened and the valve operated to assure they are in working order before installation.

Fourteen (14) cubic feet of gravel shall be placed around base of hydrants to insure drainage. Tie rods or hydrant tees and anchor couplings shall be installed, and backfill shall be thoroughly tamped around hydrants. See details.

4.1.13 Services

4.1.13.1 Service Connections

Corporation stops and curb stops shall be used on all service connections. Connections to main lines shall require a double strap saddle. Use approved tapping machine to make all taps. See Detail

4.1.13.2 Service Lines

Service line conduit and/or piping shall be installed at a minimum depth of 4 feet. Long side services installed in new subdivisions shall be installed by casing service lines in 2" conduit. Conduit may be installed under proposed streets either by open cut prior to curb and gutter installation, by mechanical boring from beyond back-of-curb to back-of-curb following curb installation, or by other acceptable means preapproved by Water and Sewerage Department Engineer or designate.

4.1.13.3 Setting Meters and Meter Boxes

Meter boxes shall be located as directed by the Water and Sewerage Department, installed plumb and backfill thoroughly tamped. Meter and Stop will be installed in box as as shown in Detail . Developer shall replace any meter boxes damaged during construction.

4.1.13.4 Cross Connections

Cross connection to any other water supply, either by the Developer or an Individual, is not permitted.

4.1.14 Cleanup and Property Restoration

Upon completion of backfilling, all surplus earth, rock or other materials shall be moved and disposed of immediately by the Contractor. All streets, driveways, monuments, mailboxes or other private property damaged by the Contractor or Sub-Contractors shall be cleaned up and restored to their original condition as soon as possible.

4.1.15 Protection of the Work

The Developer will be responsible for the care of all work until final completion and acceptance, and will be required to make good at his own expense any damage or injury it may sustain for any cause.

4.2 Hydrostatic Testing

4.2.1 Expelled Air

Before applying the specified test pressure, all air shall be expelled from the pipe. If hydrants, blow-offs or air release valves are not available at the high elevations, the Contractor shall make the necessary taps at points of highest elevation before the test is made and insert plugs after the tests have been completed. Any cracked or defective pipe, fittings, valves, or hydrants discovered in consequence of this pressure test shall be removed and replaced with sound material and the test shall be repeated until satisfactory to the Water and Sewerage Department.

4.2.2 Testing Required

After all piping has been placed, each section shall be tested by the Developer in the presence of the Department Inspector and tests shall be continued until all leaks have been made tight to the satisfaction of the Department Inspector. The Developer shall furnish all water pumps, gauges, bulkheads, and other materials necessary to conduct the test as herein required. Every precaution must be taken to valve off or otherwise protect control equipment in or attached to the pipe line to prevent damage or injury thereto. All piping shall be hydrostatically tested at a pressure of at least one and one-half times the rated pressure of the pipe for fifteen (15) minutes, then at the rated pressure of the pipe for two (2) hours.

4.2.3 Allowable Leakage Test

Following the initial fifteen (15) minute pressure test, the pressure loss shall be recorded and the pressure dropped to the rated pressure of the pipe for the additional two (2) hours.

At the end of the two (2) hour period a leakage test shall be conducted as follows. The pipe being tested shall be refilled, monitoring the amount of water required, until the original pressure
rating is obtained. The maximum leakage allowed will be ten (10) gallons per inch diameter per mile per day.

4.2.4 Water for Testing

Prior to receiving water for hydrostatic testing, the Contractor shall notify the Water and Sewerage Department that he desires water for testing and disinfection. A temporary fill line shall be extended from an existing active water main to the water main being filled. This line shall be equipped with a meter and a backflow prevention device as specified herein. The Water and Sewerage Department shall provide an inspector to operate all active water valves and witness tests and disinfection procedures. The Developer or his Contractor shall not operate active water valves under any circumstances.

Water used in testing shall be paid for by the developer at the standard rate as established by the Water and Sewerage Department. The amount shall be calculated by determining the capacities of the lines installed and being tested or as read from the meter on the temporary fill line.

4.3 Disinfection of Water Lines

4.3.1 General

After piping has been satisfactorily installed, pressure tested and flushed, the Developer shall disinfect all potable water lines and equipment installed by him. Precaution should be taken in laying pipes, valves, and hydrants to keep them as clean as possible to minimize contamination. Water mains shall be disinfected by filling them with water and introducing a chlorine solution during the filling process to achieve 25 mg/l free chlorine throughout the main. Care should be taken in filling the mains so that the entrained air is drawn from the pipe at all high points so as to permit intimate contact of the disinfection agent with the entire inside surface of the pipe and appurtenances. The disinfection solution shall be allowed to remain in the lines for not less than twenty-four (24) hours. At the end of the 24 hour period, all portions of the main shall show a residual chlorine content of not less than 10 mg/l. The heavily chlorinated water shall be neutralized with an approved chemical or method prior to discharging from the water mains.

Disinfection of water lines and the disposal of heavily chlorinated water (following disinfection) must be accomplished in accordance with the latest edition of AWWA Standard C651.

4.3.2 Notification of Testing

The Water and Sewerage Department shall be notified twenty-four (24) hours before filling lines for disinfection.

4.3.3 Amount of Disinfecting Agent Used

An acceptable method is by preparing a 1% solution with sodium hypochlorite or calcium hypochlorite. The required amount of chlorine to produce a 25 mg/l concentration in 100 feet of pipe is as follows:

Pipe Diameter	100% Chlorine (lb.)	1% Chlorine Solutions (gal.)

4	.013	0.16
6	.030	0.36
8	.054	0.65
10	.085	1.02
12	.120	1.44
16	.217	2.60

4.3.4 Residual Testing

After wasting the heavily chlorinated water and final flushing, water samples shall be taken from the water main and shall be tested for bacteriological quality at a state approved lab. Copies of written lab results must be submitted to the Water and Sewerage Department prior to installation of any water meters.

4.4 Inspections and Acceptance

4.4.1 General

Before water can be used in a new system, the system must first receive final approval and acceptance from the City of Fairburn Water and Sewerage Department.

4.4.2 Inspection for Approval

Authorized representatives of the Water and Sewerage Department shall have access to the work for inspection at any reasonable time. The final inspection of all improvements shall be held before conditional acceptance of the work and before the start of the two (2) year maintenance period. When all construction in accordance with these standards has been completed, the Developer shall request by letter a final inspection and acceptance from the Water and Sewerage Department.

All permits and drawings will be examined at this time to insure that the work has been completed in accordance with the approved plans and these standards.

4.4.3 Stop Work Order

Any work not meeting the requirements of these standards or the approved plans shall be corrected by the Developer. At any time, throughout construction, should the work not be corrected after notification by the City, a stop work order shall be issued by the City.

4.4.4 Acceptance

After all improvements are complete, the Developer shall provide the Department with a two (2) year maintenance agreement to provide for the cost of maintenance of the public improvements (water system or parts thereof). The Developer shall also issue the Water and Sewerage Department a letter of conveyance, granting ownership of the completed water system to City of Fairburn. If failures occur, in the opinion of the Department Engineer, to <u>any</u> public improvements (water systems), within a one year period from the date of the letter of acceptance, the Developer shall be notified in writing of the defects and shall be given a reasonable time to correct the problem;

otherwise, it shall be deemed a breach of the Maintenance Agreement and the Department shall have the right to make the necessary repairs, either by public contract, or using Department equipment, and the Developer shall be liable for the full amount of the cost of the repairs.

5. SEWER SYSTEM CONSTRUCTION REQUIREMENTS

5.1 Trenching and Excavation

5.1.1 General

The following shall establish the general construction requirements for the installation of sewerage systems, installed, operated, and maintained in the unincorporated areas of City of Fairburn. It shall be understood that these standards reflect the minimum requirements necessary for final acceptance of the utility by the Water and Sewerage Department.

1. It shall be the responsibility of the Developer to notify all utility companies prior to any excavation.
2. The Developer shall notify the City of Fairburn Water and Sewerage Department forty-eight (48) hours prior to beginning construction. This department may request a pre-construction conference with the Developer and his Contractor before beginning construction.
3. All construction shall be subject to inspection by authorized representatives of the Water and Sewerage Department at any time, and at their request no dirt cover shall be placed on any portion of completed sewer system until it has been inspected and approved by the Water and Sewerage Department Inspector.
4. It shall be the responsibility of the Developer to coordinate all construction and insure that these standards are adhered to. Any work not meeting these standards shall be corrected immediately by the Developer, after notification by the City Water and Sewerage Department Representative. Should the work not be corrected after verbal notification, a written stop work order shall be issued by the Water and Sewerage Department until the deficiencies have been corrected.
5. All connections to existing pipe shall utilize manholes rather than tees.
6. All work performed in excavations shall be conducted in such a way as to ensure the safety of the workers is maintained. Safe practices should conform to OSHA regulations for working in confined spaces especially as they pertain to excavations and the protective systems they require.

5.1.2 Trench Construction

5.1.2.1 <u>Trench Description</u>

Trench may be open cut from the ground surface where designated on the plans or approved by the Water and Sewerage Department. Boring may be required to protect certain surface improvements and to satisfy requirements of the Georgia Department of Transportation and/or the railroad companies. Minimum width shall be the nominal diameter of the pipe plus twelve inches

and minimum cover on pipe shall be 48 inches. Bottom of the trenches shall be hand dressed so that the pipe has even bearing on solid undisturbed earth throughout its entire length between bell holes. Bell holes of sufficient size for making perfect joints shall be provided.

5.1.2.2 Alignment and Grades

Alignment and grade control stakes shall be provided by the Contractor in accordance with the approved plans. Bench Marks and other principal control points shall be furnished by the Developer.

True alignment shall be required. Gradient control shall be by laser beam. Alignment shall be as indicated on the approved plans. When an obstruction is encountered, make necessary changes in alignment or grade as approved by the Water and Sewerage Department.

5.1.2.3 Excavation

Excavation shall consist of removing earthwork for the satisfactory placement of sewers and appurtenances. This includes vegetation, brush and debris, soil, rock, pavements, etc., for the intent and purpose of constructing the work to required lines and grades, including sheathing, bracing and dewatering of excavations, trench bed stabilization, and such other incidentals necessary to comply with plans and specifications.

All excavated material shall be placed on one side of the trench in a manner to prevent blockage of surface drainage patterns and traffic. It shall be so placed as to not endanger the work, allowing at all times free access to the trench, and all existing utilities publicly or privately owned, particularly fire hydrants.

Where necessary, wood fencing or retainers shall be erected to retain the excavated material within narrow limits to prevent the obstruction of traffic and/or encroachment upon pavements or other areas restricted by property owners. Included shall be protection of hedges, walls, flower/rock gardens, shade trees, fruit trees, and vegetable gardens. Satisfactory provisions shall be made for travel on sidewalks, crosswalks, streets, railroads, bridges, private ways, railings, barriers, etc.

All drains, gutters, culverts, and sewers for surface drainage shall be kept open, or if it is evident they must be temporarily closed then all requirements of the Owner must be met prior to such closing.

Excavated material shall not, in any case, be placed upon the pavement surfaces of public roads or streets, owned by the city, county or state, unless prior approval is given by the proper Department having jurisdiction. In periods between dusk and daylight, and during inclement weather when visibility is limited, caution lights and barricades shall be placed at each end and along the excavated material. Each building, wall, fence, pile, bridge, railroad, sidewalk, driveway, tree, lawn, garden, or any other improvement encountered is to be properly protected from injury. In event of damage during the work, prompt repairs satisfactory to the Water and Sewerage Department and the

property owner shall be made by the Contractor.

Plans direct sections where jack and bore methods are required under certain pavements and/or railroads.

5.1.2.4 Trenching

Except as specified for jack/bore procedures under pavements and railroads, all excavation shall be made by open cut, unless otherwise authorized by the Water and Sewerage Department. All work within right-of-way of railroads and state highways, shall be subject to an approval permit for construction (processed through the Owner), and all rules and regulations of those authorities shall be required. It shall be the responsibility of the developer to prepare the applications for the required permits.

Trenches shall be excavated to the grade shown of the plan and profile drawing. Where excessive excavation results, the Contractor shall construct special foundations or use special backfill methods. Over-depth excavation will be required to remove material unsuitable to support the pipe.

5.1.2.5 Sheathing and Bracing

When trench sides must be kept as nearly vertical as possible, it may be necessary to sheath, brace, or support trench sides.

When trench depth excavation exceeds five (5) feet, sheathing and bracing shall be required to protect the pipe crew from injury, irrespective of the visible judgement of soil conditions by the Contractor. In event the sheathing cannot be removed without injury to the sewer of adjoining structures, it shall be left in place or cut, and the upper part then removed. All trenching, sheathing, bracing, side sloping, etc., shall conform to the regulations of the Occupational Safety and Health Administration of the U.S. Department of Labor (OSHA). Side sloping in accordance with OSHA regulations is acceptable where conditions permit. It shall be the responsibility of the Contractor to insure that all safety measures are met.

5.1.2.6 Stabilization and Bedding

In soft ground, quicksand, or in areas where soil conditions are such that pipe alignment, or grade is endangered, the trench shall be excavated below grade and then brought back to grade with stone stabilizer material. Stone stabilizer material shall be A.S.T.M. #57 crushed stone. Depth of stone shall be 6 inch min. or as directed by the Water and Sewerage Department.

5.1.2.7 Bedding Classifications for Ductile Iron Pipe

Pipe shall be bedded in either Class B or Class C as specified by the Developer's design engineer.

Class B - The pipe shall be bedded with No. 57 stone bedding material placed on the trench bottom. The bedding shall have a minimum thickness beneath the pipe of 4 inches

or one-eighth of the outside diameter of the pipe, whichever is greater, and shall extend up the side to the springline. Backfill from pipe horizontal centerline to a level not less than 12 inches above the top of the pipe shall be of the bedding material or carefully placed native soil, compacted. Initial backfill shall be finely divided material free of debris, organic material and stones.

Class C - The pipe shall be bedded in No. 57 stone bedding material placed on the trench bottom. Native soils may be used when approved by the Water and Sewerage Department. The bedding shall have a minimum thickness beneath the pipe of 4 inches or one-eighth of the outside diameter of the pipe, whichever is greater, and shall extend up the sides of the pipe one-forth of the outside diameter of the pipe. Initial backfill between the bedding and a plane 12 inches over the top of the pipe, shall be finely divided earth free from debris and stones, and shall be compacted.

Class D - is not allowed.

5.1.2.8 Bedding Requirements for Polyvinyl Chloride Pipe

PVC sewer shall be installed in a granular embedment material as specified herein. The embedment material shall be No. 57 stone. The bedding shall be placed to the top of the pipe in three (3) successive applications. First, a three (3) inch minimum foundation shall be placed to proper grade prior to pipe installation. Following pipe installation, the embedment material shall be carefully placed as haunching to no more than one third of the pipe diameter. The haunching shall be sliced underneath the pipe barrel with a shovel to ensure firm base and side support. Thirdly, the embedment material shall be carefully placed to the top of the pipe.

Initial backfill consisting of suitable native soil shall be carefully placed and compacted to a minimum of 12 inches above the pipe. Initial backfill material shall consist of fine, loose earth containing adequate moisture for thorough compaction. The material shall be free of large stones, clods, vegetable matter, debris, and other objectionable material.

The remainder of the trench backfill shall be in accordance with the section "Backfilling."

5.1.2.9 Concrete Encasement

Concrete encasement, when required, shall completely surround the pipe and shall have a minimum thickness at any point of one-fourth of the inside diameter of the pipe or 4 inches, whichever is greater.

5.1.2.10 Rock Excavation

Remove rock to 6 inches below grade of trench and build back trench bottom with suitable material tamped into place.

When necessary, blasting operations shall be conducted in strict accordance with all existing ordinances and regulations. Blasting shall be conducted by persons licensed to use explosives.

Where blasting is to be conducted along the right-of-way of a state claimed roadway, the Developer shall provide the Water and Sewerage Department all necessary information to submit blasting permit applications to the Georgia Department of Transportation for approval. Blasting may be conducted only after this permit is received.

5.1.2.11 Limit of Open Trench

The length of the trench to be opened or the area of surface to be disturbed and restored at any one time shall be limited to that which the Contractor can complete in one day's work, or less in event of apparent inclement weather, or not to exceed 100 feet.

It shall be the Contractor's responsibility to provide adequate barricades, warning signs, flagmen, flashing lights, etc., as necessary to safeguard the public. All trenches must be backfilled by the close of each work day.

5.1.2.12 Disposition of Water

Keep trenches free of water. The Contractor shall furnish all equipment and labor necessary to remove any water found or accumulated in the trench. Other excavation shall be kept clear of water while pipe is being laid or concrete or masonry is being placed. No pipe shall be laid in water and water must not be permitted to flow over or rise upon any masonry or pipe until the work has been accepted to prevent flow-in of silty water and thus prevent buildup of foreign matter in the pipe.

All water pumped or bailed from the trench or other excavation must be conveyed in an acceptable manner to a suitable point of discharge, i.e. a stream or ditch, where it shall not cause injury to public health, or public or private property, or to work under construction or previously completed or to the street surfaces, or to cause interference with the use of streets by the public.

5.1.2.13 Excavation Near Roads and Railroads

Special care must be exercised in trenching near roads and railroads to protect against collapsing of the roadbed structure. Each situation must be evaluated on account of varying soils. Where excavations encroaching at or near roads and/or railroads will be limited because of scheduled jack/bore methods required for installations under roads and/or railroads, the trench excavated shall be halted at least ten (10) feet from the pavement edge of a road, or more if soil conditions so indicate, and no nearer than twenty-five (25) feet from the centerline of the railroad track nearest the excavation as measured at 90 degrees (right angles) to the railroad.

5.1.2.14 Subsurface Obstructions

In excavating, backfilling and laying pipe care must be taken not to remove, disturb or injure any water, sewer, gas, electric, telephone, or other conduits or utilities without prior approval of the owner of the utility encountered, including private utilities.

If necessary in order to perform the intended work, the Contractor shall sling, shore up, and maintain such utilities in operation, and promptly repair any damage done to them.

Before final acceptance of the work, all such utilities shall be made "equal to or better" than prior to construction.

It shall be the Contractor's responsibility to locate underground utilities. In event of damage to the utilities, the Contractor will promptly notify the utility owner (private or public) and must assume full responsibility therefore.

In event pipe or conduits providing service to adjoining buildings are broken, or damaged to some questionable degree of service, the Contractor shall immediately make repairs at his own expense, or be otherwise liable for repair costs incurred by others. The utility owner reserves the right to make repairs, caused by the Contractor, without prior notice. Removal or relocation of a utility encountered may be done upon prior approval by the utility owner given directly to the Contractor.

5.1.2.15 Embankments

Whenever the sewer is to be installed in a fill area or in cut with less than four (4) feet of cover (top of pipe to ground surface), the Water and Sewerage Department will require the installation of ductile iron pipe.

5.1.3 Inspection Before Laying of Pipe

Before any pipe is laid in the trench, the pipe shall be subject to inspection. Only first quality pipe with smooth surfaces (interior and exterior), free from cracks, flaws, blisters, etc., shall be used.

5.1.4 Pipe Installation

Pipe installation shall be performed with bell ends upgrade without any break in alignment or grade between manholes. A thorough cleaning of all dirt, and foreign matter shall be made of bells and sockets before jointing. Pipe materials shall meet specifications contained elsewhere herein.

5.1.4.1 Handling

Pipe shall be carefully unloaded with a pipe unloader or crane.

5.1.4.2 Laying

Pipe shall be swept clean of trash or dirt before lowering into the trench. After the pipe has been cleaned it shall be lowered into the trench in such a manner that the pipe shall not be damaged. Each joint shall then be lined and brought to a uniform grade upon a solid trench bottom. Bell holes for couplings or bell shall be prepared with a minimum clearance of two inches. Pipe shall be laid in straight lines on uniform grades.

Before stopping work each day all open pipe ends shall be closed with a proper size plug. Protect pipe from floating.

5.1.4.3 Joining

5.1.4.3.1 Mechanical Joints

Clean spigot and bell of foreign material and apply a prepared lubricant solution before slipping gasket and gland over spigot end of pipe. Small side of gasket and lip of gland must face the socket. Paint gasket with lubricant solution and place spigot end of pipe securely home in socket. Push gasket evenly into position in socket, slide gland into position and tighten bolts with fingers.

Tighten bolts with a torque wrench to recommended tightness by tightening bottom bolt and then top bolt. Thereafter, all bolts shall be tightened in sequence of 180° apart until all bolts are within the range of torque recommended by the manufacturer. If effective sealing is not accomplished, disassemble and reassemble after thorough cleaning.

5.1.4.3.2 Slip Joints

Jointing shall be made with rubber gaskets and lubricant furnished by the manufacturer in strict accordance with the manufacturer's recommendations. Prepare field cut pipe by filing 1/8 inch 30° bevel on pipe end to avoid.

5.1.4.4 Connections to Existing Manholes

Connections to existing manholes shall be made at the locations shown on the plans as directed by the Water and Sewerage Department. All connections shall be made in a neat and workmanlike manner to avoid damage to the existing structure. Core and boot suitable modification to the manhole bench shall be made to the satisfaction of the Water and Sewerage Department.

5.1.5 Backfilling

Backfill material above the pipe embedment shall consist of native earth, free from large stones, clods, debris or other objectionable material.

In traffic areas, particularly roads and streets, parking lots and walkways, the full backfill shall receive thorough tamping in 6 inch layers to a minimum of 98% standard proctor density. The Water and Sewerage Department may request that soil compaction test be performed by an outside testing consultant. The developer will be responsible for payment to the testing consultant. Particular attention is directed to driveways and walkways, and areas subject to mail delivery where prompt backfilling is required to prevent inconvenience to the public.

In all areas of construction, the excavated material shall be cleared from the premises and the completed work left in a neat and acceptable condition. Included are such items as broken pavement and other matter not classified as earth.

Trenches and other excavated areas completed by the Contractor shall be kept in a good and safe condition during a two year maintenance period following acceptance by the Water and Sewerage Department and regulatory agencies.

5.1.5.1 Time

Trenches shall be backfilled as soon as practical after laying and jointing the pipe. Provisions for traffic as specified under "Trench Excavation" must be adhered to.

5.1.5.2 In Non-Traffic Areas

Initial backfill shall be placed carefully with suitable material in layers not exceeding 6 inches in thickness and thoroughly compacted with mechanical tamps to one foot above the top of the pipe. The remainder of the trench may be backfilled without compaction. The backfill shall be rounded over the trench to provide allowance for future backfill settlement.

5.1.6 Highway and Railroad Crossings

Install in strict accordance with railroad or State Highway requirements and all applicable provisions of the plans and specifications.

Perform no work until satisfactory arrangements have been made with the State Highway Department or railroad.

Install casing pipe by jacking, boring or tunneling in strict accordance with the requirements of the Georgia Department of Transportation and FHWA or railroad; diameter of the hole shall not exceed the outside diameter of the pipe.

Cement grout shall be pumped around pipe where voids were developed during the installation operation.

Casing pipe shall be steel as previously specified and joints shall be welded. Carrier pipe shall be ductile iron with mechanical joints as previously specified. Welds shall be filled arc weld type performed only by qualified welders, meeting American Welding Society, and American Institute of Steel Construction Standards. Welds shall be continuous, watertight, and develop a greater strength than the pipe.

Install on required grade. Inside and outside of welds shall have all rust, mill scale, flux flumes, oxides, grease and oil removed by chipping and wire brushing immediately before applying touchup coating.

All weld areas and areas where coating has been scratched shall be recoated with coal tar material of same type and thickness as original coating. Outside shall be coated immediately after welding.

Carrier pipe will be pushed into casing on wooden skids to avoid damaging coating in casing.

Seal ends of casing in accordance with Georgia Department of Transportation or railroad requirements.

5.1.7 Asphalt Concrete Paving Replacement (Where Open Cut is Allowed)

Materials and construction methods shall conform to the Georgia State

Department of Transportation Standard Specifications, latest edition.

5.1.7.1 Removal

Existing pavement shall be sawed.

5.1.7.2 Excavation and Backfill

Excavation and backfill shall be in accordance with this Section.

5.1.7.3 Base

Base shall be 8 inches of "High Early Strength" concrete in accordance with Section 430 of the Georgia Standard Specifications for Construction of Roads and Bridges.

5.1.7.4 Pavement

Pavement shall be hot mix asphaltic concrete either Type "E" or "F", and shall be in accordance with Section 400 of the Georgia Standard Specifications for Construction of Roads and Bridges.

5.1.8 Manhole Installation

Manhole installations shall be provided as shown on the approved plans. Excavation for manholes shall be sufficient to provide six (6) inches of clearance between the outer surface of the manhole and the soil, or timber sheathing if required. All manholes shall be provided with steps placed sixteen (16) inches center to center and properly aligned.

5.1.9 Service Lines

A sewer service line shall be provided for every existing or proposed lot or building. Services shall extend to the property line of the lot being served and normally be located within ten (10) feet of the lower corner of the lot. The depth of the lines shall be no less than two (2) feet.

5.1.10 Sewage Pump Stations

Sewage pump stations shall be installed at locations as indicated on the approved plans.

5.2 Gravity Sewer Testing

5.2.1 General

All newly installed lines shall be televised following installation. The tape shall then be submitted to the Water and Sewerage Department.

When requested by the City of Fairburn Water and Sewerage Department, the Contractor shall test the integrity of the installed sewer line by one or more of the following: low pressure air test; a measurement of infiltration; mandrel test, and velocity test. These tests shall be performed upon such lines selected by the Water and Sewerage Department.

5.2.2 Low Pressure Air Tests

5.2.2.1 Safety

The Contractor shall have the responsibility to ensure that all air plugs are

installed and braced to prevent blowouts. Pressurizing equipment shall include a regulator or relief valve to avoid overpressurizing and damaging an otherwise acceptable line. No one shall be allowed in the manholes during testing.

5.2.2.2 Preparation of the Test Line

Secure the plugs in all pipe outlets, including stoppers in laterals, to resist the test pressure. Clean out all debris in the pipe. At the option of the contractor, the interior pipe surface may be wet by flushing the line in order to produce more consistent test results.

5.2.2.3 Procedure

The Contractor shall slowly introduce low pressure air into the sealed line until the internal air pressure reaches four (4) psig. The air supply shall then be throttled to maintain the four (4) psig internal pressure for at least two (2) minutes to permit the temperature of the entering air to equalize with the temperature of the pipe wall. When temperatures have equalized and the pressure stabilized, the air hose from the air supply shall be shut off. The pressure shall then be decreased to no less than 3.5 psig. At a reading of 3.5 psig, or any convenient pressure reading between 3.5 and 4.0 psig, timing shall begin with a stop watch. If the time shown in the table below for the designated pipe size and length elapses before the air pressure drops one (1) psig, the section undergoing the test has passed and shall be presumed to be free of defective joints.

5.2.2.4 Calculation of Test Time

Specified Time for Lengths Shown

Pipe Diameter	Min. Time	100 Ft.	200 Ft .	300 Ft.	400 Ft.
8"	3:47	3:47	3:47	3:48	5:04
10"	4:43	4:43	4:43	5:56	7:54
12"	5:40	5:40	5:42	8:33	11:22

5.2.2.5 Groundwater Conditions

Groundwater should be taken into consideration and calculated for. Add one (1) p.s.i. for every 2.3 ft. of groundwater above the pipe.

5.2.2.6 Retest of Test Section

Any section of line in which a loss of more than 1.0 p.s.i.g. is encountered during the period of test may be retested at the option of the contractor. Failure of a test section of a line shall require location and grouting or other repair or replacement of the source of excessive air loss. The Water and Sewerage Department shall approve the method to be used prior to any repair or replacement.

5.2.3 Measurement of Infiltration

The contractor shall furnish an adequate number of plugs of the proper size and acceptable weirs to measure infiltration into the system.

Infiltration greater than 25 gallons per inch diameter of pipe per mile of sewer per day will not be accepted. Any visible or audible leak must be dug up and repaired unless it is found to be in a joint and the Water and Sewerage Department has authorized it to be repaired by chemical grouting. Any increase in flow between two adjacent manholes must be corrected.

Measurements of flow shall be performed on any lines with a visible flow of water.

5.2.4 Mandrel Test

At the request of the Water and Sewerage Department a Mandrel Test shall be performed on PVC sewer pipe to test for maximum allowable deflection. The mandrel shall be sized to test a 5.0% deflection. The mandrel diameter shall be 5.0% less than the average reference internal diameter. Minimum diameters of mandrels to be used are as follows: 8" = 7.33"; 10" = 9.16"; 12" = 10.90". The following procedure is recommended:

1. Completely flush the line making sure the pipe is clean of any mud or trash that would hinder the passage of the mandrel.
2. During the final flushing of the line, attach a floating block or ball to the end of the mandrel pull rope and float the rope through the line. (A nylon ski rope is recommended.)
3. After the rope is threaded through line, connect the pull rope to the mandrel and place the mandrel in the entrance of the pipe.
4. Connect a second rope to the back of the mandrel. This will enable the mandrel to be retrieved if excessive deflection is encountered.
5. Remove all the slack in the pull rope by gently pulling the rope at the far manhole. After the slack has been removed, place a tape marker on the rope close to the pipe opening where the mandrel will exit. If mandrel encounters excessive deflection, the marker will provide a means of measuring the travel distance of the mandrel so that the deflected area can be located.
6. Draw mandrel through the sewer line.
7. An increasing resistance to pull is an indication of excessive deflection. If this occurs, measure the distance from beginning marker on rope to manhole. Locate section and replace bedding or pipe if visual examination reveals damage.
8. Retest.

5.2.5 Velocity Test

On lines installed at minimum grade or at any time the City of Fairburn Water and Sewerage Department suspects that a problem with flow will occur a velocity test of the suspect section may be requested.

The contractor shall add sufficient water at a point upstream of the suspect section. After flow has reached a steady rate, dye or some type of floating object such as a ping pong ball, or fishing float will be passed through the line. The float will be timed as it passes through the

section. Any line, in which a velocity of two (2) feet per second cannot be obtained, will not be accepted.

5.3 Force Mains

5.3.1 Hydrostatic Test

Force mains shall be hydrostatically tested after the pipe has been laid and backfilled between joints. Each section of pipe shall be subjected by hydrostatic gauge pressure at the rated pressure of the pipe for two (2) hours. Each section of pipe shall be slowly filled with water and brought to the specified test pressure, based on the elevation of the lowest point of the line or

Televising shall be performed following installation and a tape provided to the Water and Sewerage Department lowest point of the section under test, and corrected to the elevation of the test gauge. The pressure shall be applied by means of a gasoline driven test pump connected to the pipe in a manner satisfactory to the Water and Sewerage Department. The contractor shall make arrangements for metering the amount of water used during the test. The contractor shall backfill all pipe and provide all thrust blocking before hydrostatic testing. It shall be the contractor's responsibility to locate and repair any and all leaks that are found. The Water and Sewerage Department may direct the contractor to leave certain joints and connections uncovered until testing has been completed. All exposed pipe, fittings, valves, and joints will be carefully examined during the open trench test. Any cracked or defective pipe, fittings, or valves discovered in consequence of this pressure test shall be removed and replaced, and the test shall be repeated until satisfactory.

5.3.2 Leakage Test

In conjunction with the hydrostatic test, a leakage test shall be conducted at the rated pressure of the pipe. This leakage test will be conducted for two (2) hours and the maximum leakage allowed will be ten (10) gallons per inch diameter per mile per day.

5.4 Inspections and Acceptance

5.4.1 General

Before sewage is introduced into a new system, the system must first receive final approval and acceptance from the City of Fairburn Water and Sewerage Department.

5.4.2 Inspection for Approval

Authorized representatives of the Water and Sewerage Department shall have access to the work for inspection at any reasonable time. The final inspection of all improvements shall be held before conditional acceptance of the work and before the start of the two (2) year maintenance period. When all construction in accordance with these standards has been completed, the Developer shall request by letter a final inspection and acceptance of the system from the Water and Sewerage Department.

All permits and drawings will be examined at this time to insure that the work has been completed in accordance with the approved plans and these standards.

5.4.3 Stop Work Order

Any work not meeting the requirements of these standards or the approved plans shall be corrected by the Developer. At any time, throughout construction, should the work not be corrected after notification by the County, a stop work order shall be issued by the County.

5.4.4 Acceptance

After all improvements are complete, the Developer shall provide the Department with a two (2) year maintenance agreement to provide for the cost of maintenance of the public improvements (sewer system or parts thereof). The Developer shall also issue the Water and Sewerage Department a letter of conveyance, granting ownership of the completed sewer system to City of Fairburn.

If failures occur, in the opinion of the Department Engineer, to <u>any</u> public improvements (sewer systems), within a two year period from the date of the letter of acceptance, the Developer shall be notified in writing of the defects and shall be given a reasonable time to correct the problem; otherwise, it shall be deemed a breach of the Maintenance Agreement and the Department shall have the right to make the necessary repairs, either by public contract, or using Department equipment, and the Developer shall be liable for the full amount of the cost of the repairs.

TYPICAL DETAILS

NUMBER	TITLE	
BFP_0001	BFP-0001	AIR GAP DETAIL
BFP_0002	BFP-0002	ATMOSPHERIC VACUUM BREAKER INSTALLATION
BFP_0003	BFP-0003	PRESSURE VACUUM BREAKER ASSEMBLY INSTALLATION
BFP_0004	BFP-0004	DOUBLE CHECK VALVE BACKFLOW PREVENTERS
BFP_0005	BFP-0005	REDUCED PRESSURE BACKFLOW PREVENTER
BFP_0006	BPF-0006	TANK/TRUCK FILLING METHODS
BFP_0007	BFP-0007	CLASS 1 AND 2 FIRE SPRINKLER
BFP_0008	BFP-0008	CLASS 3 AND 4 FIRE SPRINKLER
BFP_0009	BFP-0009	CLASS 5 AND 6 FIRE SPRINKLER
BFP_0010	BFP-0010	PARALLEL R.P.Z. ASSEMBLY INSTALLATION
BFP_0011	BFP-0011	REDUCED PRESSURE ZONE ASSEMBLY INSTALLATION
BFP_0013	BFP-0013	RESIDENTIAL IRRIGATION WITH BACKFLOW PREVENTOR INSTALLATION
BFP_0014	BFP-0014	SPILL VACUUM BREAKER DETAIL
S-0001	S-0001	GREASE TRAP INSTALLATION
S-0002	S-0002	SEWER LATERALS INSTALLATION
S-0003	S-0003	STANDARD SEWER MANHOLES PRECAST CONCRETE
S-0004	S-0004	PRECAST CONCRETE MANHOLE DOGHOUSE
S-0005	S-0005	STANDARD SEWER PIPE SEWER DATA
S-0006	S-0006	OUTSIDE DROP MANHOLE
S-0008	S-0008	FORCE MAIN BEDDING DETAIL
S-0009A	S-0009A	MANHOLE COVER (HEAVY DUTY)
S-0009B	S-0009B	MANHOLE FRAME
S-0012	S-0012	OUTFALL MANHOLE FRAME & COVER
S-0014	S-0014	EXISTING FORCE MAIN TIE-IN DETAIL
U-0001	U-0001	12' ACCESS ROAD INSTALLATION
U-0002_	U-0002	TYPICAL PAVEMENT CUT
U-0003	U-0003	TYPICAL ROAD CROSSING
U-0005	U-0005	UTILITY PLACEMENT
U-0006	U-0006	TYPICAL RIGHT-OF-WAY AND SHOULDER INSTALLATIONS
W-0001A	W-0001E	2 1/2" & LARGER DOUBLE CHECK DETECTOR ASSEMBLY (8" REFLECTED ABOVE)
W-0002A	W-0002	BADGER DOMESTIC METER WITH BACK FLOW PREVENTER
W-0004	W-0004	8" DOUBLE CHECK DETECTOR ASSEMBLY WITH 2" & UP COMPOUND METER
W-0005	W-0005	4"-10" DCDA BFP & VAULT P.I.V., FIRE DEPT. CONNECTION & ROMAC DISMANTLING DEVICE
W-0006	W-0006	TYPICAL FIRE HYDRANT INSTALLATION
W-0007	W-0007	TYPICAL CREEK CROSSING
W-0008	W-0008	APPROVED METHOD FOR FILLING NEW WATER MAINS
W-0009	W-0009	THRUST BLOCK DETAIL
W-0010	W-0010	BADGER FIRE SERVICE METER W/ BY-PASS LINE, DOUBLE CHECK VALVE ASSEMBLY
W-0011	W-0011	APPROVED FLUSHING HYDRANTS
W_0012	W-0012	TYPICAL INSTALLATION RESIDENTIAL SOIL APPLICATION
W-0012A	W-0012A	DUAL RESIDENTIAL AND IRRIGATION METER INSTALLATION
W-0012B	W-0012B	RESIDENTIAL IRRIGATION METER INSTALLATION
W-0013A	W-0013A	STANDARD 5/8" OR 3/4" METER BOX AND LID
W-0013B	W-0013B	CUSTOMER CUT-OFF 10" ROUND IRRIGATION TURF BOX LID
W-0013C	W-0013C	DUAL RESIDENTIAL AND IRRIGATION METER BOX
W-0013D	W-0013D	STANDARD 1" POSITIVE DISPLACEMENT W/ DOUBLE CHECK METER BOX AND LID
W-0013E	W-0013E	STANDARD 2" COMPOUND METER BOX AND LID
W-0014	W-0014	AIR RELEASE VALVE DETAIL
W-0015	W-0015	WATER LINE VALVE TAPPING SLEEVE
W-0016	W-0016	TERMINAL END DETAIL
W-0017	W-0017	ELEVATION VIEW FOR VAULT INSTALLATIONS
W-0018	W-0018	WATERLINE VALVE INSTALLATION
W-0019	W-0019	VALVE MARKER DETAIL
W-0020	W-0020	RESIDENTIAL SHORT SIDE SERVICE INSTALLATION
W-0020A	W-0020A	RESIDENTIAL LONG SIDE SERVICE INSTALLATION
W-0022A	W-0022A	CONCRETE GRADE BEAM DETAIL
W-0023	W-0023	WATER LINE VALVE INSTALLATION
W-0024	W-0024	COMMERCIAL METER SOIL APPLICATION
W-0025	W-0025	FIRE HYDRANT METER VAULT INSTALLATION 3" NEPTUNE METER & 2" DOUBLE CHECK ASSEM
W-0026	W-0026	BY-PASS LINE ASSEMBLY
W-0028	W-0028	BLOW-OFF VALVE INSTALLATION

AIR GAP (AG): THE PHYSICAL SEPERATION BY AN AIR SPACE OF THE POTABLE WATER SUPPLY AND AN OPEN VESSEL THAT CONTAINS NONPOTABLE FLUIDS. THE VERTICAL DISTANCE BETWEEN THE SUPPLY PIPE AND THE FLOOD LEVEL RIM SHOULD BE TWO TIMES THE DIAMETER OF THE SUPPLY PIPE, BUT NEVER LESS THAN 1 INCH.

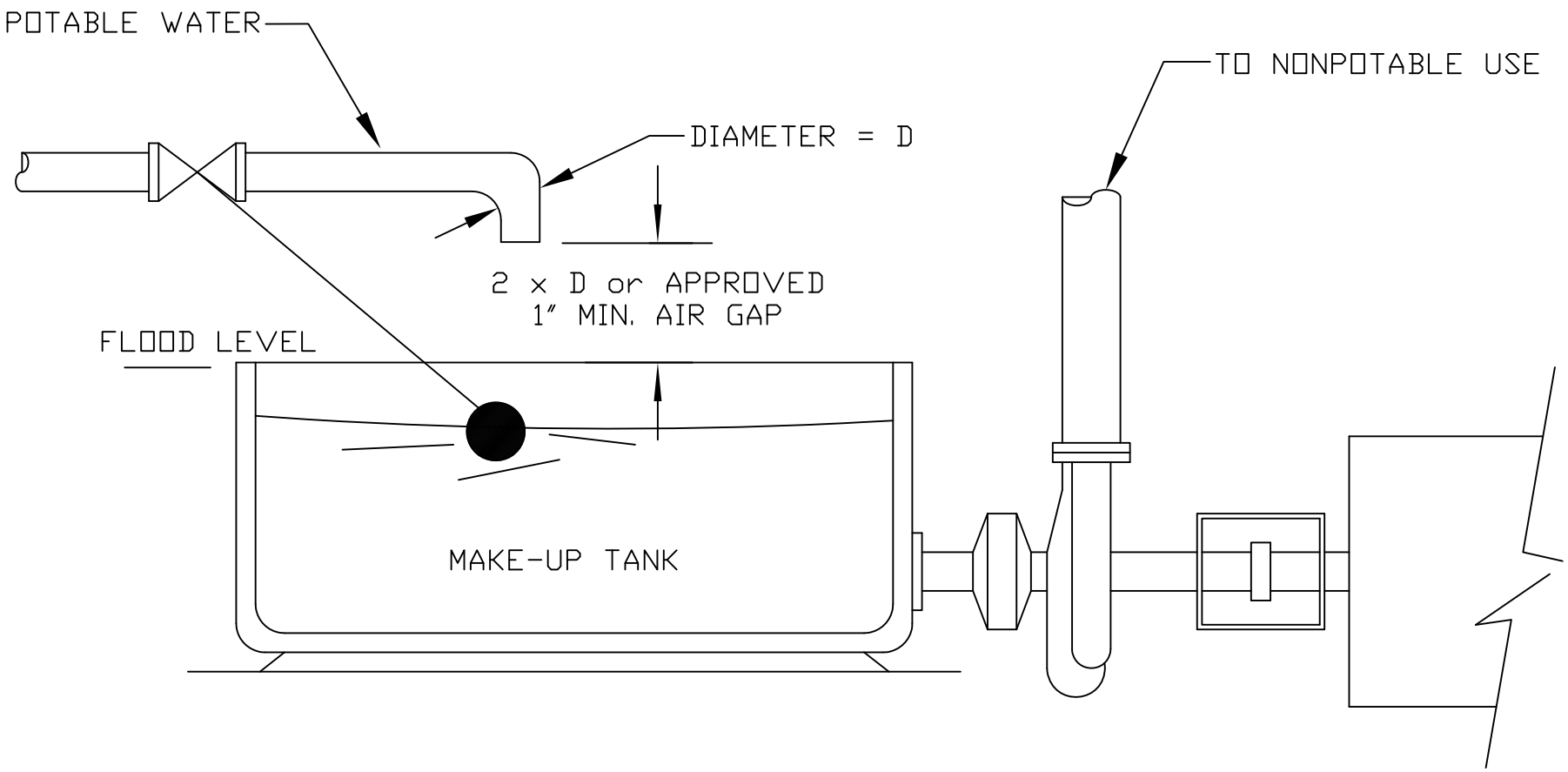

CITY OF FAIRBURN
WATER & SEWER
56 MALONE STREET
FAIRBURN, GEORGIA 30213
770-964-2244

AIR GAP DETAIL

BFP-0001

DESIGNED: J.F.C.	DRAWN:
DATE: 01/15	SCALE: N.T.S.

BY	REVISIONS	DATE

ATMOSPHERIC VACUUM BREAKERS (AVB): MAY BE USED ONLY ON NONPRESSURE CONNECTIONS TO A NONPOTABLE SYSTEM WHERE THE VACUUM BREAKER IS NEVER SUBJECTED TO BACK PRESSURE AND IS INSTALLED ON THE DISCHARGE SIDE OF THE LAST CONTROL VALVE. IT MUST BE INSTALLED ABOVE THE USAGE POINT. IT CAN NOT BE USED UNDER CONTINUOUS PRESSURE. HOSE VACUUM BREAKERS MAY BE USED ON SILL COCKS AND SIMILAR VALVES WITH THREADS OUTLETS.

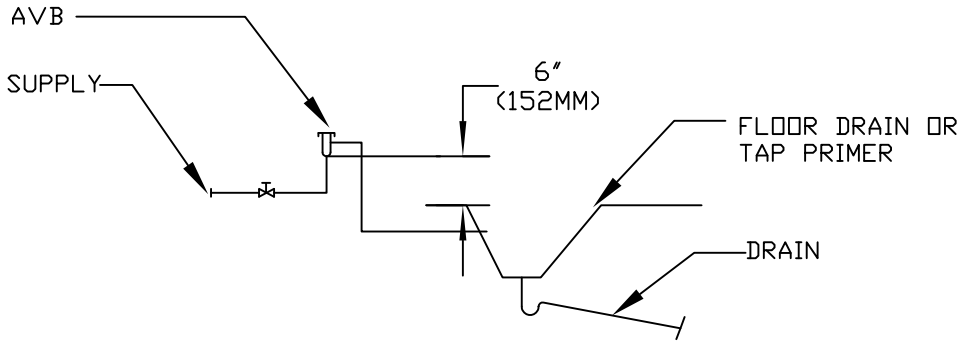

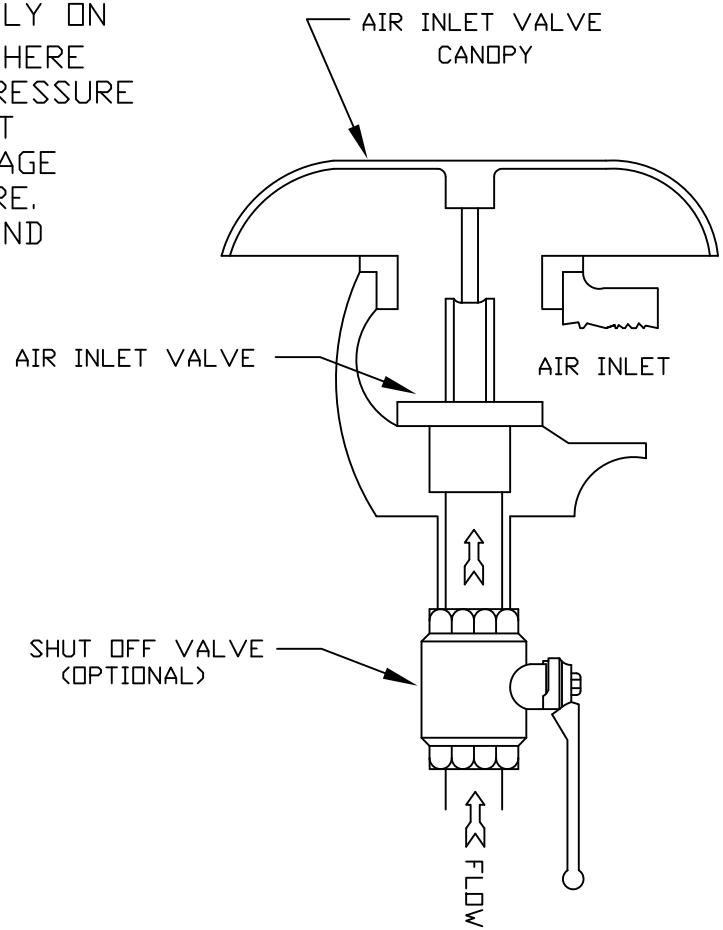

CITY OF FAIRBURN
WATER & SEWER
56 MALONE STREET
FAIRBURN, GEORGIA 30213
770-964-2244

ATMOSPHERIC VACUUM BREAKER INSTALLATION

BFP-0002

DESIGNED: J.F.C.	DRAWN:
DATE: 01/15	SCALE: N.T.S.

BY	REVISIONS	DATE

PRESSURE VACUUM BREAKERS (PVB): MAY BE USED AS PROTECTION AGAINST NONPRESSURE CONNECTIONS TO VESSELS CONTAINING CONTAMINANTS WHERE THE VACUM BREAKERS ARE NOT SUBJECT TO BACKPRESSURE . THESE UNITS MAY BE USED UNDER CONTINUOS SUPPLY PRESSURE . THEY MUST BE INSTALLED ABOVE THE USAGE POINT.

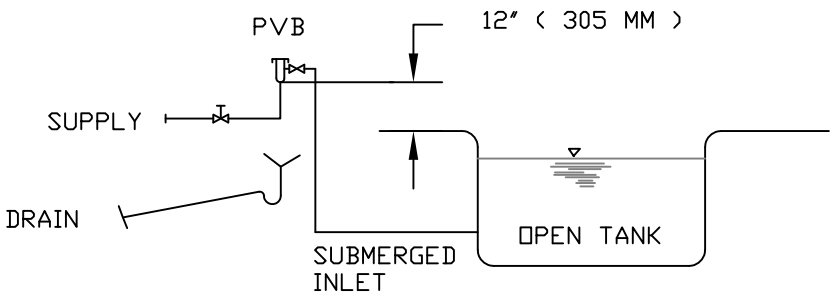

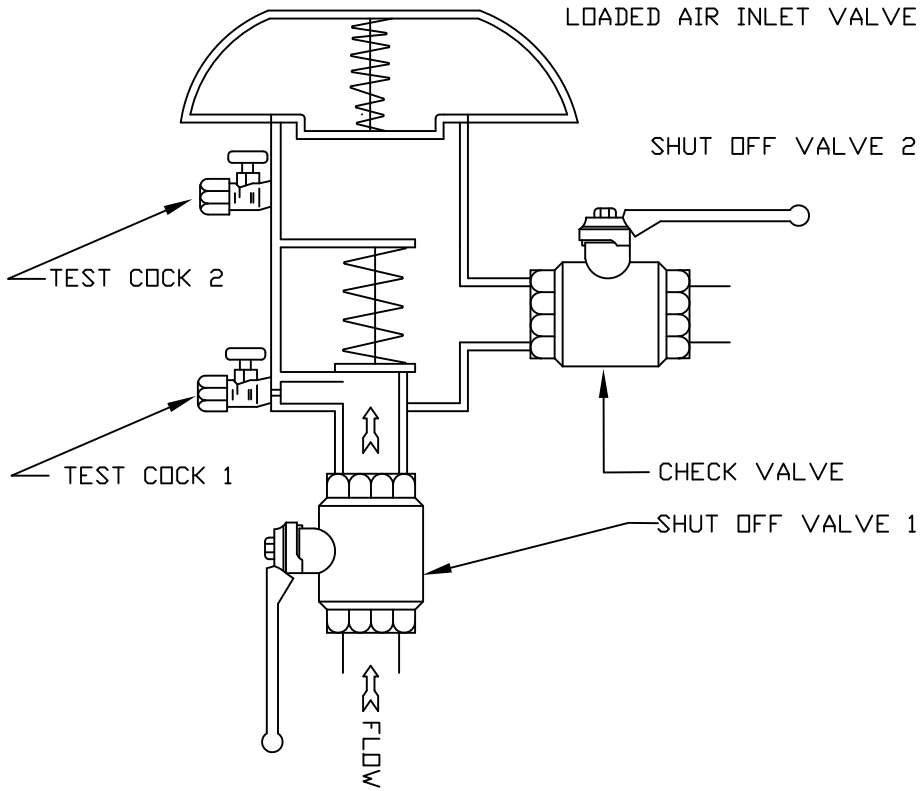

CITY OF FAIRBURN
WATER & SEWER
56 MALONE STREET
FAIRBURN, GEORGIA 30213
770-964-2244

PRESSURE VACUUM BREAKER ASSEMBLY INSTALLATION

BFP-0003

DESIGNED: J.F.C.	DRAWN:
DATE: 01/15	SCALE: N.T.S.

BY	REVISIONS	DATE

DOUBLE CHECK VALVE BACKFLOW PREVENTERS (DCV) :
DOUBLE CHECK VALVES AND DUAL CHECK BACKFLOW PREVENTERS MAY BE USED AS PROTECTION FOR ALL PRESSURE CONNECTIONS THROUGH WHICH POLLUTANTS MIGHT ENTER THE POTABLE WATER STSTEM IN CONCENTRATION THAT COULD CONSTITUTE A NUISANCE OR BE AESTHETICALLY OBJECTIONABLE, SUCH AS AIR, STEAM, OR OTHER MATERIALS THAT DO NOT CONSTITUTE A HEALTH HAZARD.

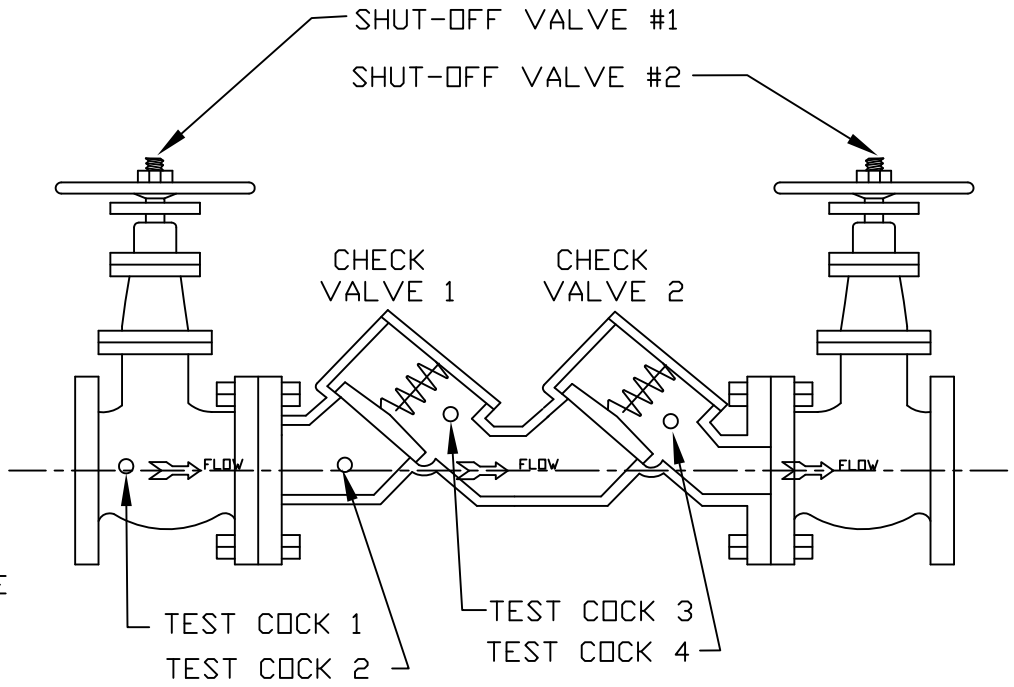

CITY OF FAIRBURN
WATER & SEWER
56 MALONE STREET
FAIRBURN, GEORGIA 30213
770-964-2244

DOUBLE CHECK VALVE BACKFLOW PREVENTERS

BFP-0004

DESIGNED: J.F.C.	DRAWN:
DATE: 01/15	SCALE: N.T.S.

BY	REVISIONS	DATE

FIG. 5

REDUCED PRESSURE ZONE BACKFLOW PREVENTERS (RPZ);

SHALL BE USED ON ALL PRESSURE CONNECTIONS THAT SHALL BE SUBJECT TO BACKPRESURE, AND WHERE THERE IS THE POTENTIAL FOR CONTAMINATION AND HEALTH HAZARD.

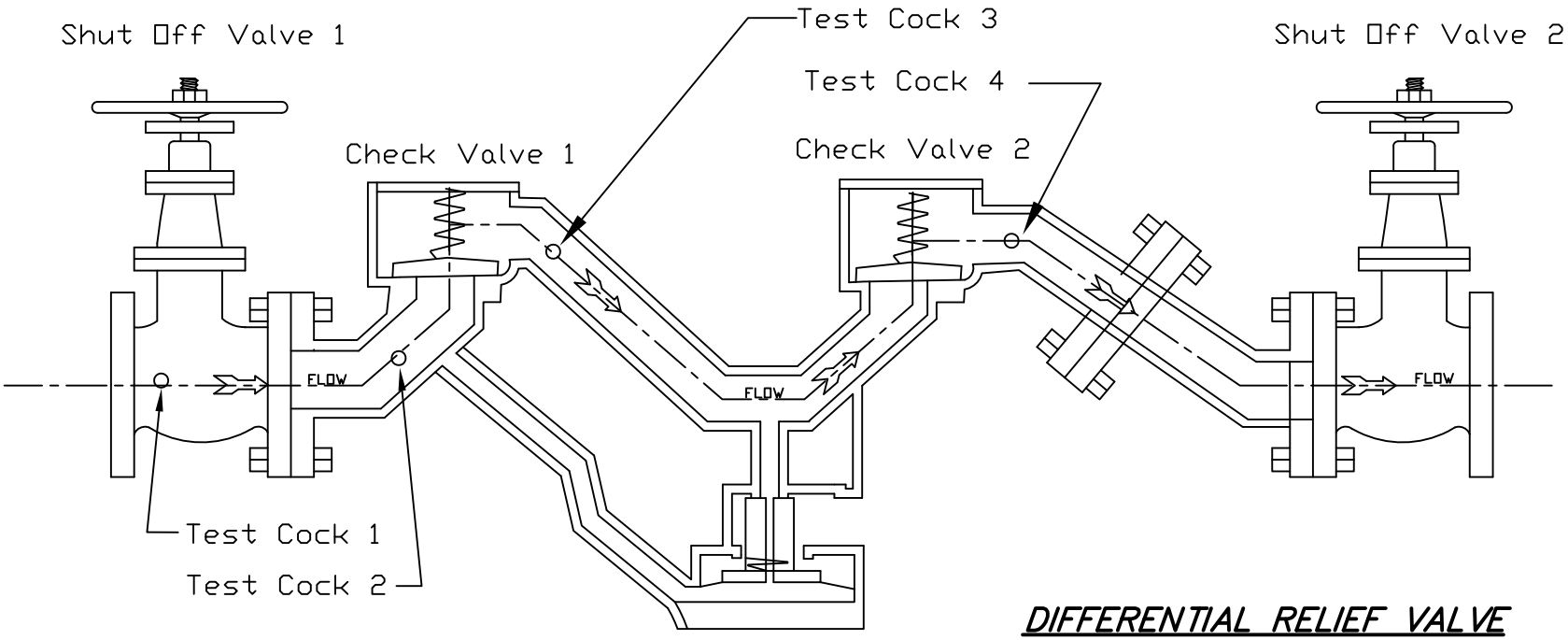

DIFFERENTIAL RELIEF VALVE

CITY OF FAIRBURN WATER & SEWER 56 MALONE STREET FAIRBURN, GEORGIA 30213 770-964-2244	REDUCED PRESSURE BACKFLOW PREVENTER	BFP-0005						BY
		DESIGNED: J.F.C.	DRAWN:					REVISIONS
		DATE: 01/15	SCALE: N.T.S.					DATE

APPROVED METHODS OF FILLING TANKS, TANKER TRUCKS :

ANY WATER BEING INTRODUCED INTO A VESSEL,TANK ,TANKER TRUCK ETC.; FROM ANY CONNECTION TO THE CITY OF FAIRBURN WATER DISTRIBUTION MUST BE THROUGH AN APPROVED BACKFLOW PREVENTION DEVICE. THE MOST EFFECTIVE AND ECONOMICAL METHOD IS BY AN APPROVED AIR-GAP SEPERATION BETWEEN THE WATER INLET AND OVERFLOW LEVEL OF THE VESSEL OR TANK. AT NO TIME SHALL A HOSE, EITHER HAND HELD OR OTHERWISE IMMERSED IN A VESSEL OR TANK BE AN ACCEPTABLE METHOD FOR THIS TYPE APPLICATION.

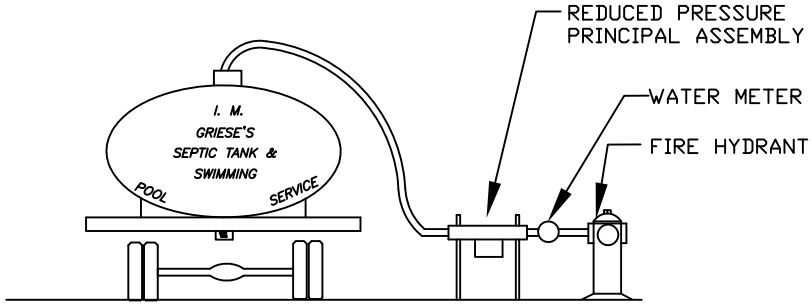

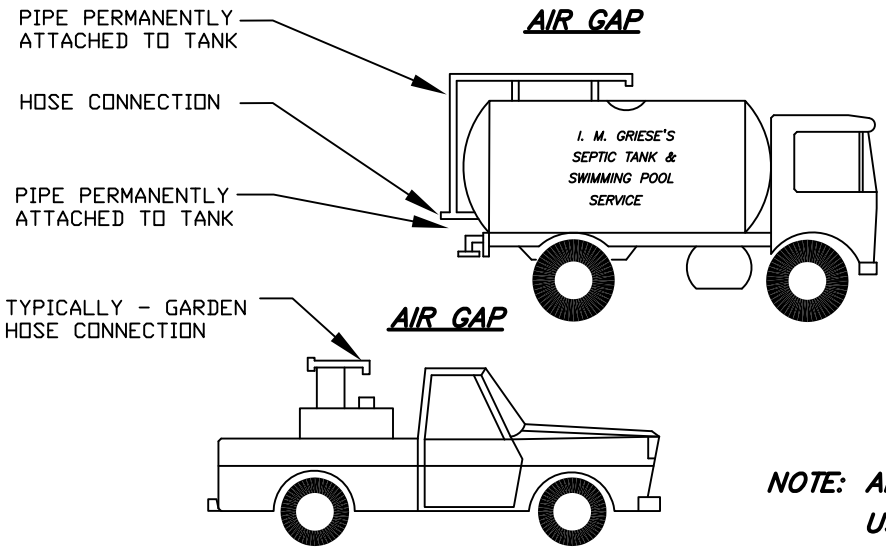

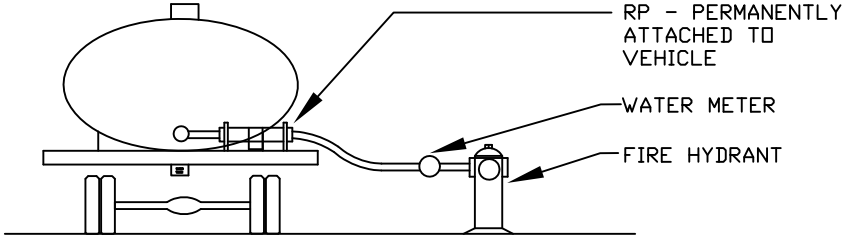

NOTE: ANYONE FOUND IN VIOLATION WILL BE PROHIBITED FROM FURTHER USE OF THE CONNECTION AND WILL BE SUBJECT TO FINE.

CITY OF FAIRBURN WATER & SEWER 56 MALONE STREET FAIRBURN, GEORGIA 30213 770-964-2244	TANK/TRUCK FILLING METHODS	BFP-0006						BY
		DESIGNED: J.F.C.	DRAWN:					REVISIONS
		DATE: 01/15	SCALE: N.T.S.					DATE

CLASS 1 FIRE SPRINKLER - SYSTEM

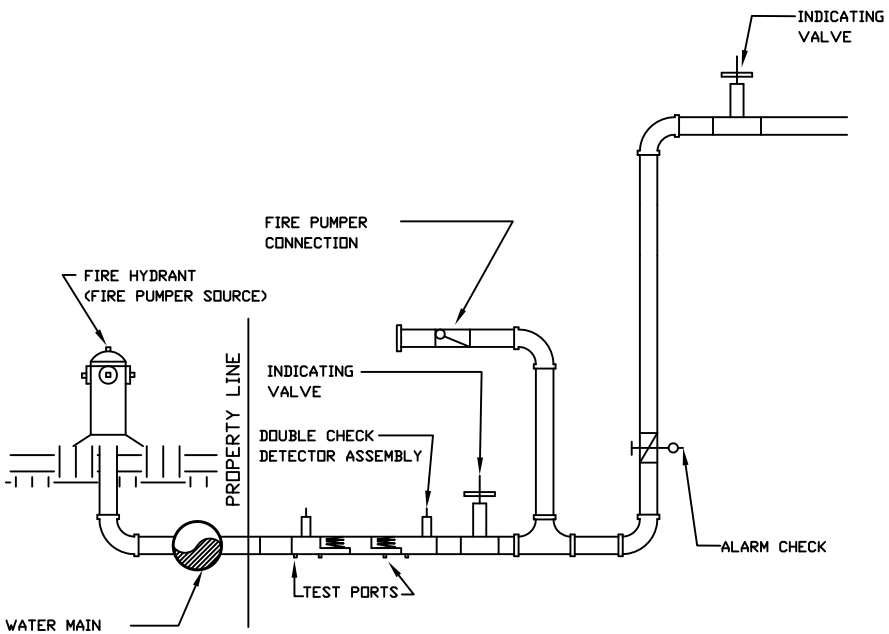

CLASS 1~ DIRECT CONNECTIONS FROM PUBLIC WATER MAINS ONLY; NO PUMPS, TANKS, OR RESEVOIRS; NO PHYSICAL CONNECTION FROM OTHER WATER SUPPLIES; NO ANTIFREEZE OR OTHER ADDITIVES OF ANY KIND; ALL SPRINKLER DRAINS DISCHARGING TO ATMOSPHERE, DRY WELLS OR OTHER SAFE OUTLETS.

CLASS 2 FIRE SPRINKLER SYSTEM

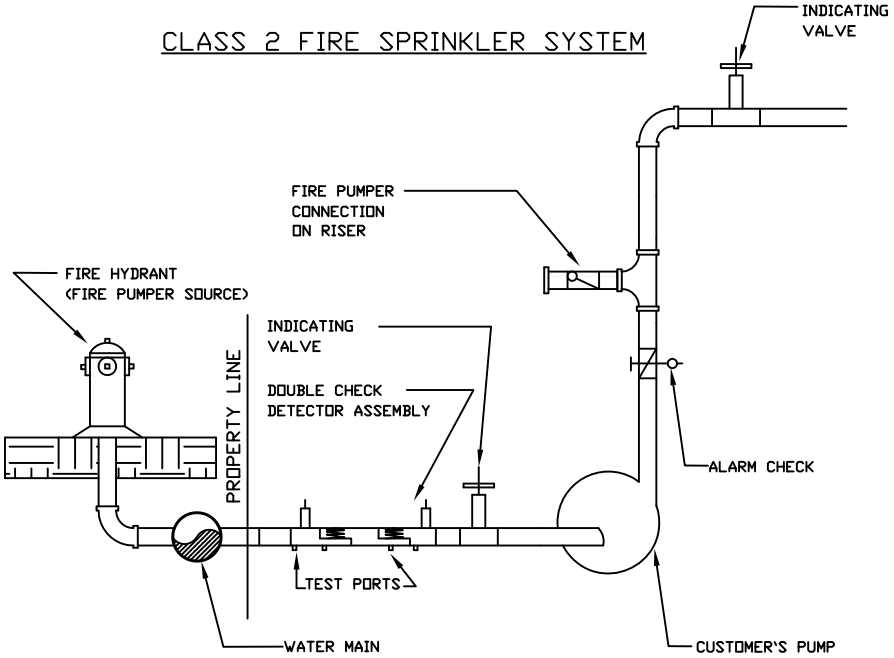

CLASS 2~ SAME AS CLASS 1, EXCEPT BOOSTER PUMPS MAY BE INSTALLED IN THE CONNECTIONS FROM THE STREET MAINS, (BOOSTER PUMPS DO NOT AFFECT THE POTABILITY OF THE SYSTEM: IT IS NECESSARY, HOWEVER, TO AVOID DRAFTING SO MUCH WATER THAT PRESSURE IN THE WATER MAIN IS REDUCED BELOW 20 P.S.I.)

CITY OF FAIRBURN
WATER & SEWER
56 MALONE STREET
FAIRBURN, GEORGIA 30213
770-964-2244

CLASS 1 AND 2 FIRE SPRINKLER

BFP-0007

DESIGNED: J.F.C.	DRAWN:
DATE: 01/15	SCALE: N.T.S.

BY	REVISIONS	DATE

Class 3 Fire Sprinkler System

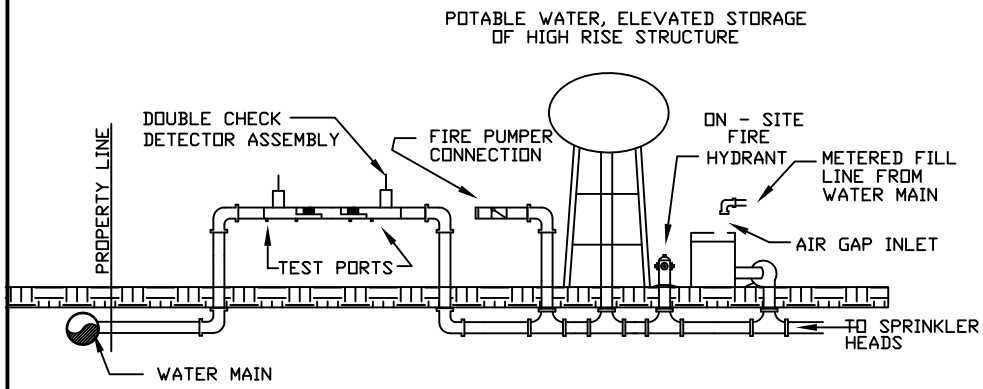

CLASS 3~ DIRECT CONNECTION FROM PUBLIC WATER SUPPLY MAIN PLUS ONE OR MORE OF THE FOLLOWING: ELEVATED STORAGE TANKS; FIRE PUMPS TAKING SUCTION FROM ABOVE - GROUND COVERED RESERVOIRS OR TANKS; AND PRESSURE TANKS. (ALL STORAGE FACILITIES ARE FILLED BY OR CONNECT TO PUBLIC WATER ONLY, THE WATER IN THE TANKS TO BE MAINTAINED IN A POTABLE CONDITION. OTHERWISE, CLASS 3 SYSTEMS ARE THE SAME AS CLASS 1.)

Class 4 Fire Sprinkler System

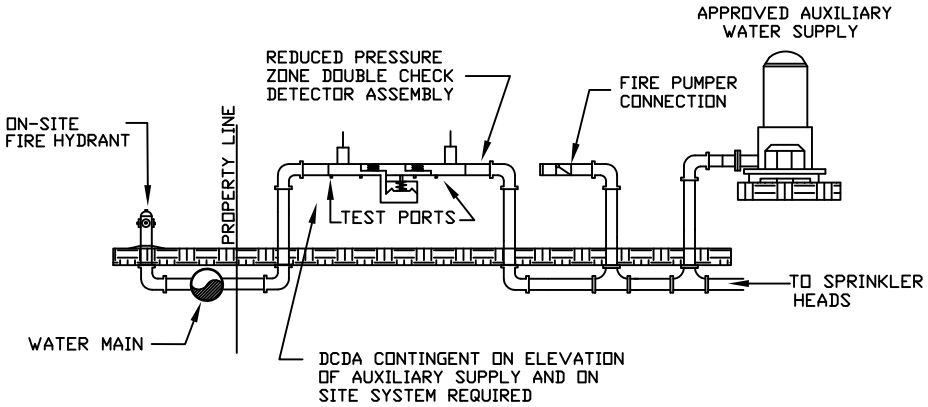

CLASS 4~ DIRECTLY SUPPLIED FROM PUBLIC MAINS SIMILAR TO CLASSES 1 AND 2 WITH AN AUXILIARY WATER SUPPLY ON OR AVAILABLE TO THE PREMISES; OR AN AUXILIARY SUPPLY LOCATED WITHIN 1,700 FEET OF THE PUMPER CONNECTION.

CITY OF FAIRBURN
WATER & SEWER
56 MALONE STREET
FAIRBURN, GEORGIA 30213
770-964-2244

CLASS 3 AND 4 FIRE SPRINKLER

BFP-0008

DESIGNED: J.C.F.	DRAWN:
DATE: 01/15	SCALE: N.T.S.

BY	REVISIONS	DATE

CLASS 5~ FIRE SPRINKLER SYSTEM

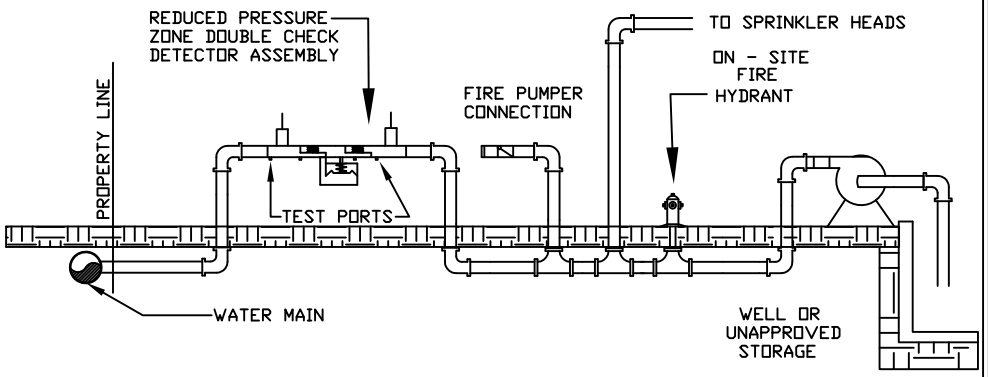

CLASS 5 ~ DIRECTLY SUPPLIED FROM PUBLIC MAINS, AND INTERCONNCTED WITH AUXILLARY SUPPLIES, SUCH AS: PUMPS TAKING SUCTION FROM RESERVOIRS EXPOSED TO CONTAMINATION, OR RIVERS AND PONDS: DRIVEN WELLS: MILLS OR OTHER INDUSTRIAL WATER SYSTEMS: OR WHERE ANTIFREEZE OR OTHER ADDITIVES ARE USED.

CLASS 6~ FIRE SPRINKLER SYSTEM

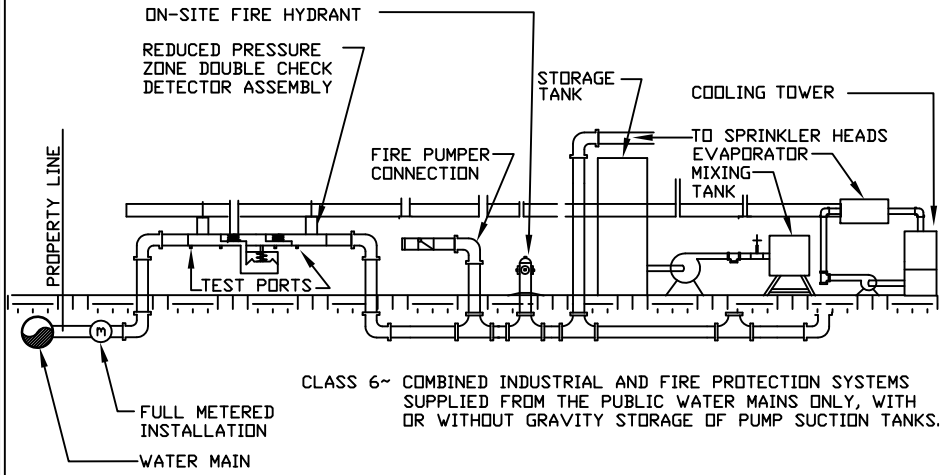

CLASS 6~ COMBINED INDUSTRIAL AND FIRE PROTECTION SYSTEMS SUPPLIED FROM THE PUBLIC WATER MAINS ONLY, WITH OR WITHOUT GRAVITY STORAGE OF PUMP SUCTION TANKS.

CITY OF FAIRBURN
WATER & SEWER
56 MALONE STREET
FAIRBURN, GEORGIA 30213
770-964-2244

CLASS 5 AND 6 FIRE SPRINKLER

BFP-0009

DESIGNED: J.F.C.	DRAWN:
DATE: 01/15	SCALE: N.T.S.

BY	REVISIONS	DATE

NOTE:

TWO OR MORE BACKFLOW PREVENTION ASSEMBLIES OF THE SAME TYPE MAY BE INSTALLED IN PARALLEL POSITION TO PROVIDE UNINTERRUPTED WATER SERVICE TO THE WATER USER, TYPICALLY KNOWN AS A "CRITICAL SERVICE". WHEN IT IS NECESSARY TO INSTALL BACKFLOW PREVENTION ASSEMBLIES IN A PARALLEL POSITION, THERE ARE SEVERAL HYDRAULIC CONDITIONS WHICH MAY BE CONSIDERED.

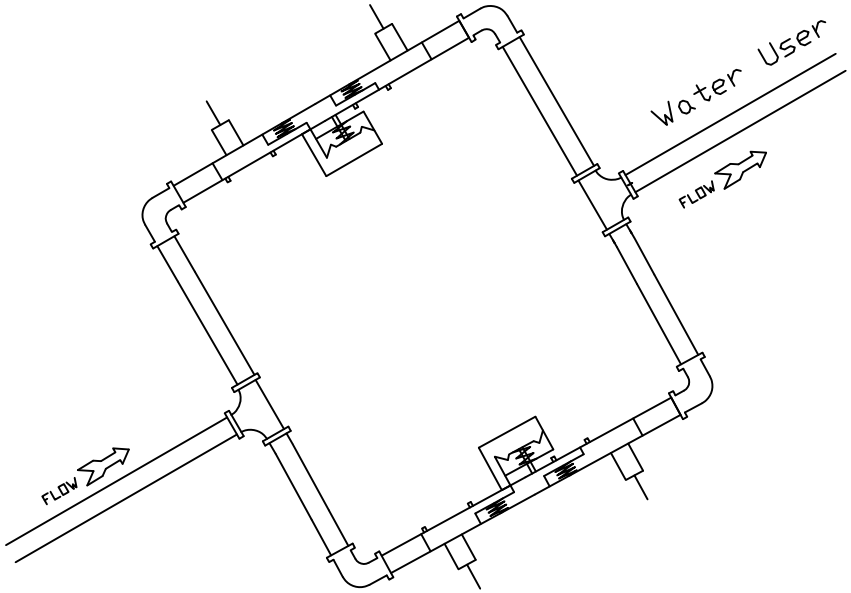

EXAMPLE OF R.P.'S INSTALLED IN PARALLEL POSITION

CITY OF FAIRBURN
WATER & SEWER
56 MALONE STREET
FAIRBURN, GEORGIA 30213
770-964-2244

PARALLEL R.P.Z. ASSEMBLY INSTALLATION

BFP-0010

DESIGNED: J.C.F.	DRAWN:
DATE: 01/15	SCALE: N.T.S.

BY	REVISIONS	DATE

R.P.Z. INSTALLATION DETAIL

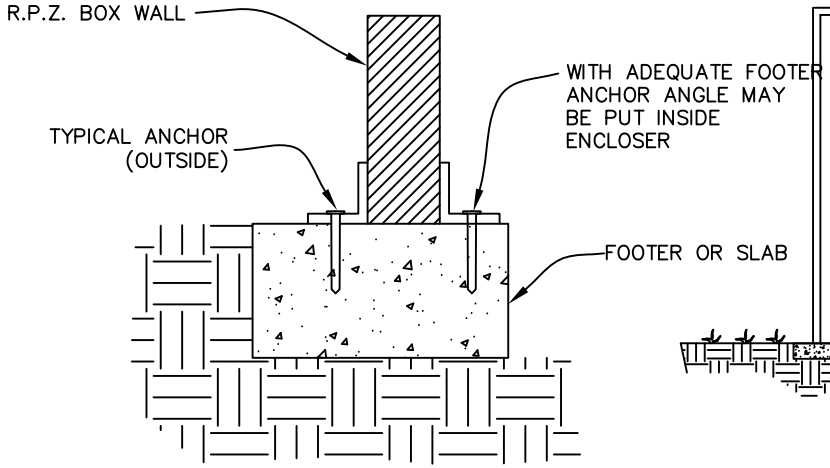

FOOTER OR CONCRETE SLAB (R.P.Z. BOX)

NOTE: IF A PERIMETER FOOTER IS USED THEN THERE MUST BE GRAVEL COVERING THE ENTIRE BOTTOM OF THE ENCLOSER A FULL (12") TWELVE INCHES DEEP

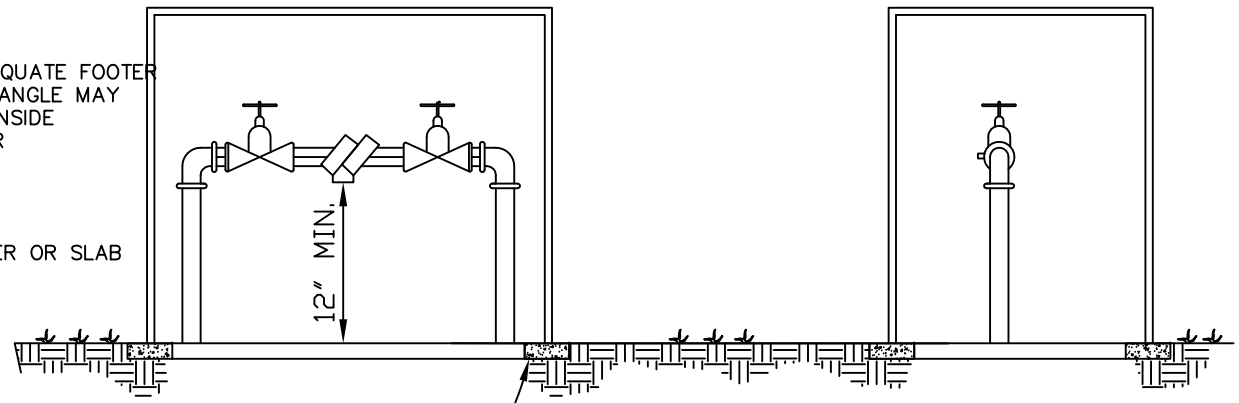

FOOTER (TYP) ALTERNATIVE IS 4" X 6" CONCRETE FOOTER OR 4" THICK FULL CONCRETE SLAB
*NOTE:
BOX SHOULD BE HEATED OR INSULATED TO PROTECT FROM FREEZING

CITY OF FAIRBURN WATER & SEWER 56 MALONE STREET FAIRBURN, GEORGIA 30213 770-964-2244	REDUCED PRESSURE ZONE ASSEMBLY INSTALLATION	BFP-0011						BY
		DESIGNED: J.C.F.	DRAWN:					REVISIONS
		DATE: 01/15	SCALE: N.T.S.					DATE

*NOTE: ALL BACKFLOW PREVENTERS SHALL BE TESTED BY A CERTIFIED TESTER AND PAPERWORK TURNED IN TO THE CITY OF FAIRBURN W & S BACKFLOW PREVENTION UNIT NO LATER THAT 15 DAYS AFTER INSTALLATION.

IRRIGATION METER PLAN VIEW

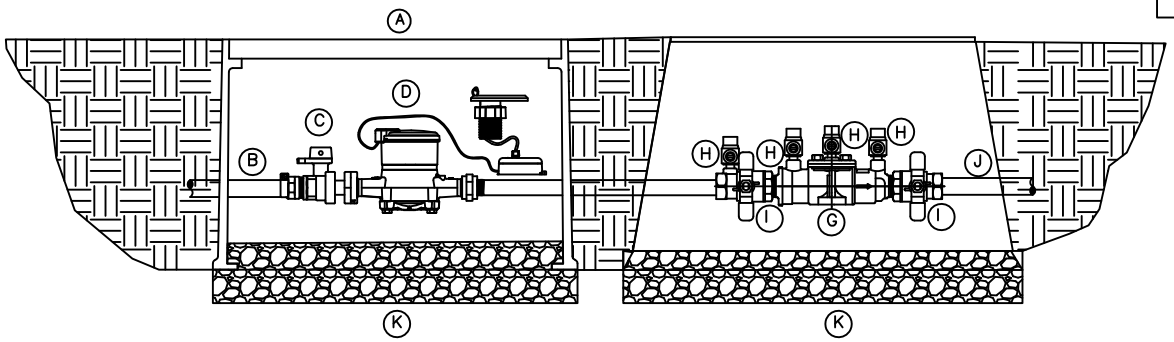

A.) MID–STATES PLASTIC MSBC1416–12 METER BOX W/ CAST IRON LID (DEVELOPER INSTALLED)
B.) TYPE K COPPER SERVICE LINE CONNECTION (DEVELOPER INSTALLED)
C.) CURB STOP–FORD B43–332W OR APPROVED EQUAL (DEVELOPER INSTALLED)
D.) 3/4" BADGER RECORDALL DISC WATER METER OR APPROVED EQUAL
E.) DUAL CHECK –WILKINS 700 IUFMX34UF OR APPROVED EQUAL
F.) 3/4" WATTS BRASS FBVSSTH BALL VALVE W / STAINLESS STEEL "T"
G.) DOUBLE CHECK VALVE
H.) TEST COCKS
I.) 3/4" WATTS BRASS FBVSSTH BALL VALVE W / STAINLESS STEEL "T"
J.) IRRIGATION LINE
K.) 6" MIN #57 STONE

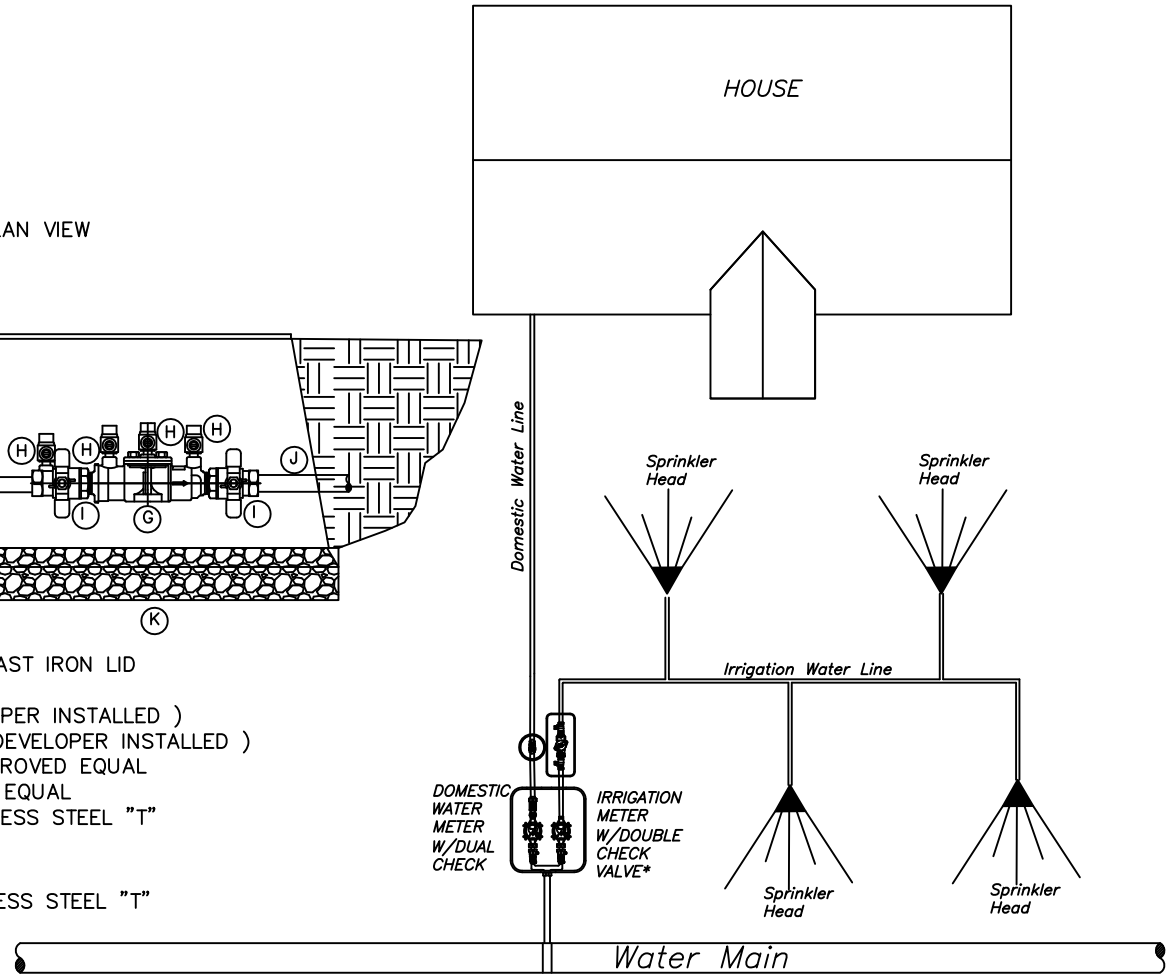

CITY OF FAIRBURN
WATER & SEWER
56 MALONE STREET
FAIRBURN, GEORGIA 30213
770–964–2244

RESIDENTIAL IRRIGATION WITH BACKFLOW PREVENTOR INSTALLATION

BFP–0013

DESIGNED: J.F.C.	DRAWN:
DATE: 01/15	SCALE: N.T.S.

BY	REVISIONS	DATE

SPILL-RESISTANT PRESSURE VACUUM BREAKER BACK-SIPHONAGEPREVENTION ASSEMBLY (SVB):

MAY BE USED AS PROTECTION AGAINST NON PRESSURE CONNECTIONS TO VESSELS CONTAINING CONTAMINANTS WHERE THE VACUUM BREAKERS ARE NOT SUBJECT TO BACK SIPHONAGE PRESSURE. THESE UNITS MAY BE USED UNDER CONTINUOS SUPPLY PRESSURE. THEY MUST BE INSTALLED ABOVE THE USAGE POINT.

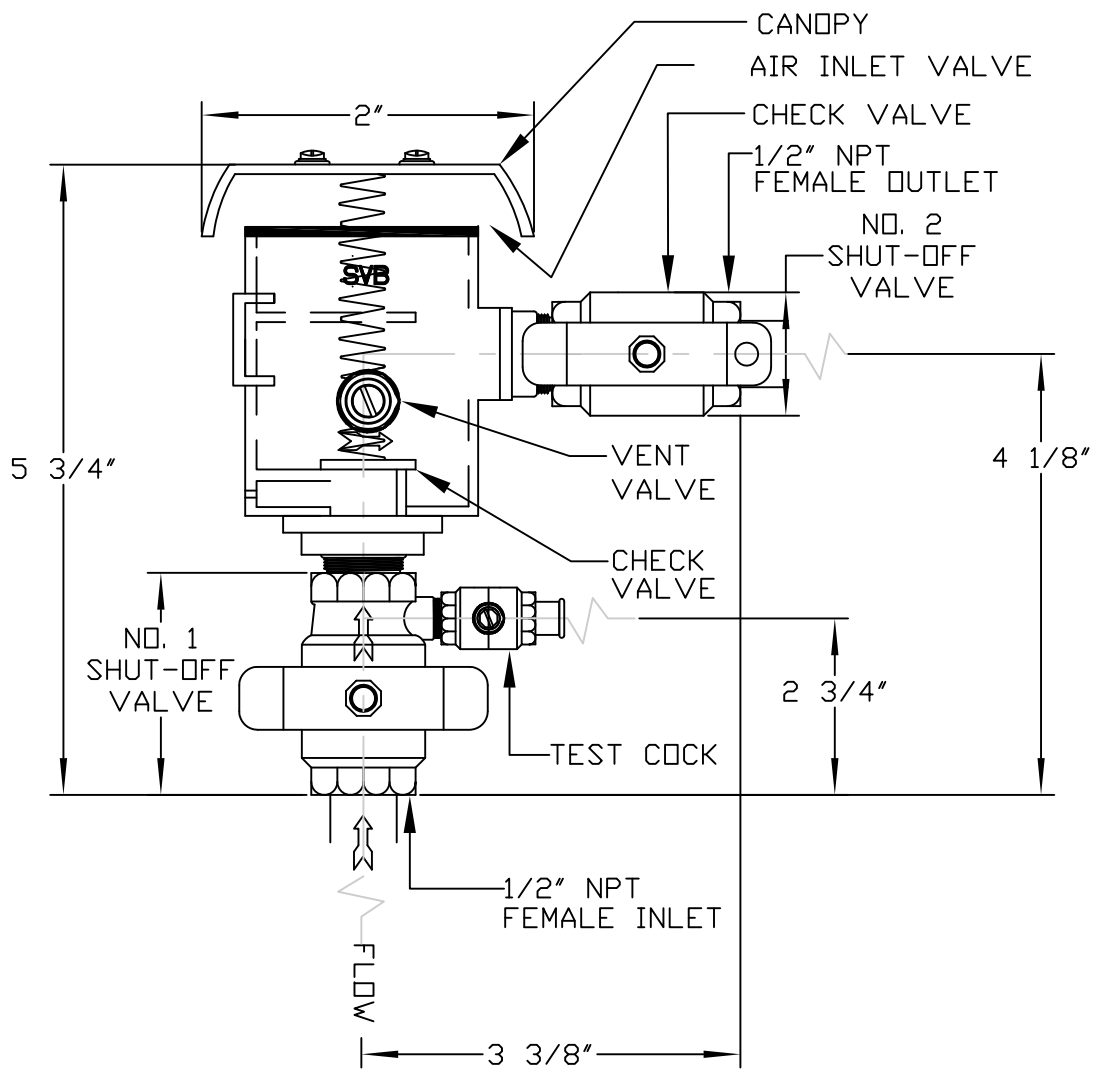

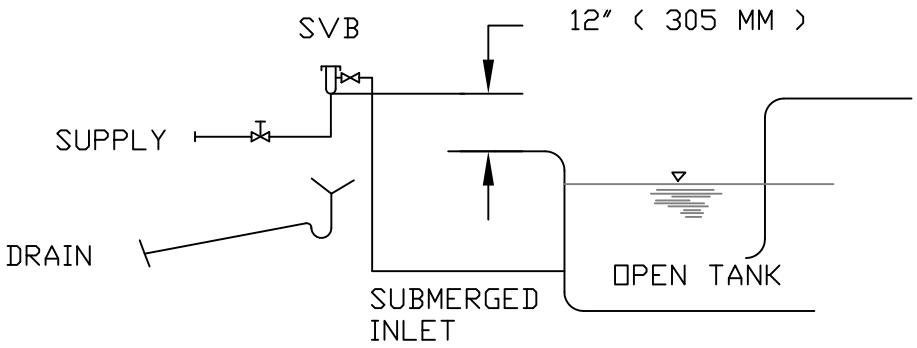

CITY OF FAIRBURN
WATER & SEWER
56 MALONE STREET
FAIRBURN, GEORGIA 30213
770-964-2244

SPILL VACUUM BREAKER DETAIL

BFP-0014

DESIGNED: J.F.C.	DRAWN:
DATE: 01/15	SCALE: N.T.S.

BY	REVISIONS	DATE

TYPICAL GREASE INTERCEPTER TANK INSTALLATION

ZABEL A300 FILTER

MONITORING MANHOLE

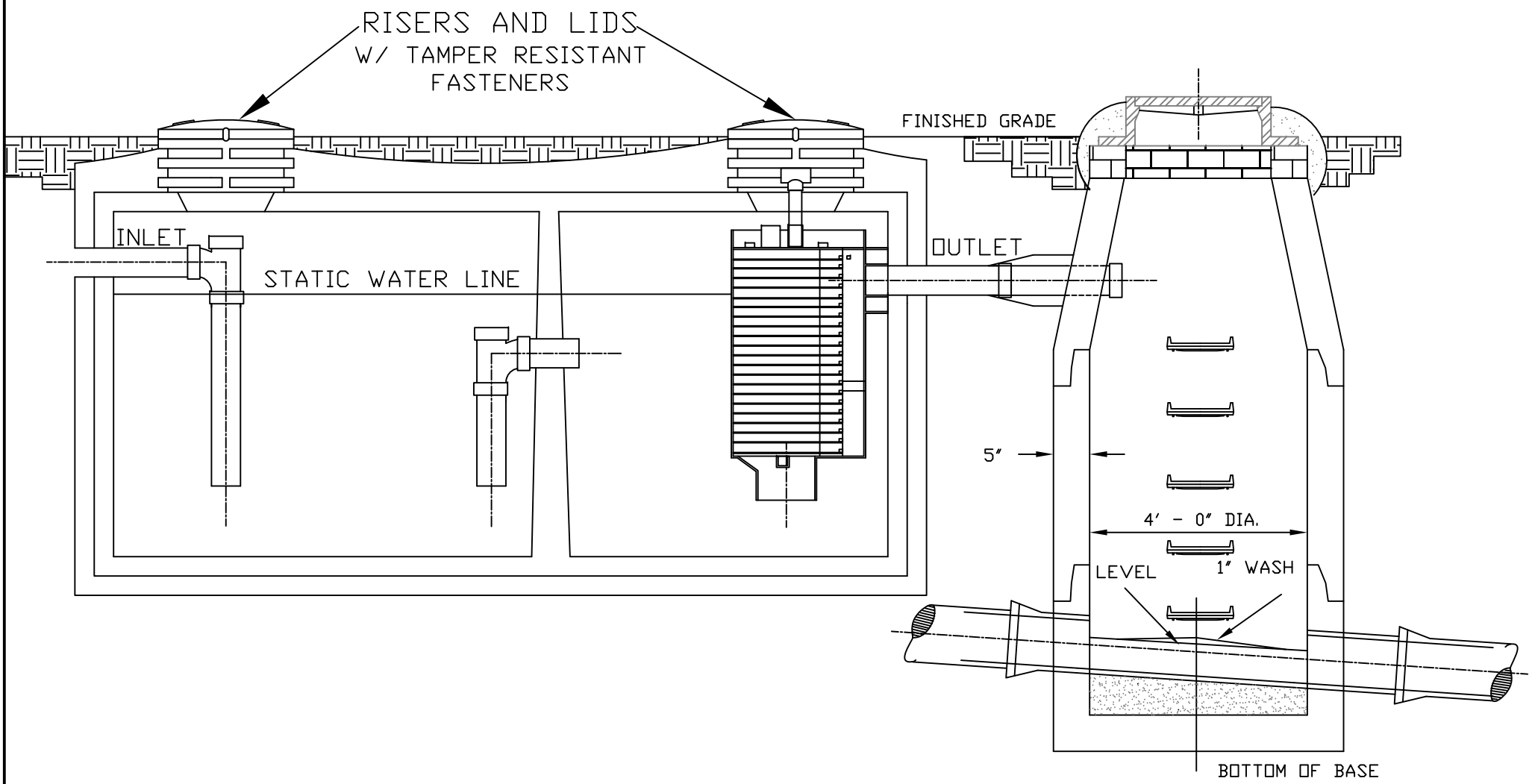

CITY OF FAIRBURN
WATER & SEWER
56 MALONE STREET
FAIRBURN, GEORGIA 30213
770-964-2244

GREASE TRAP INSTALLATION

S-0001

DESIGNED: J.F.C.	DRAWN:
DATE: 01/15	SCALE: N.T.S.

BY	REVISIONS	DATE

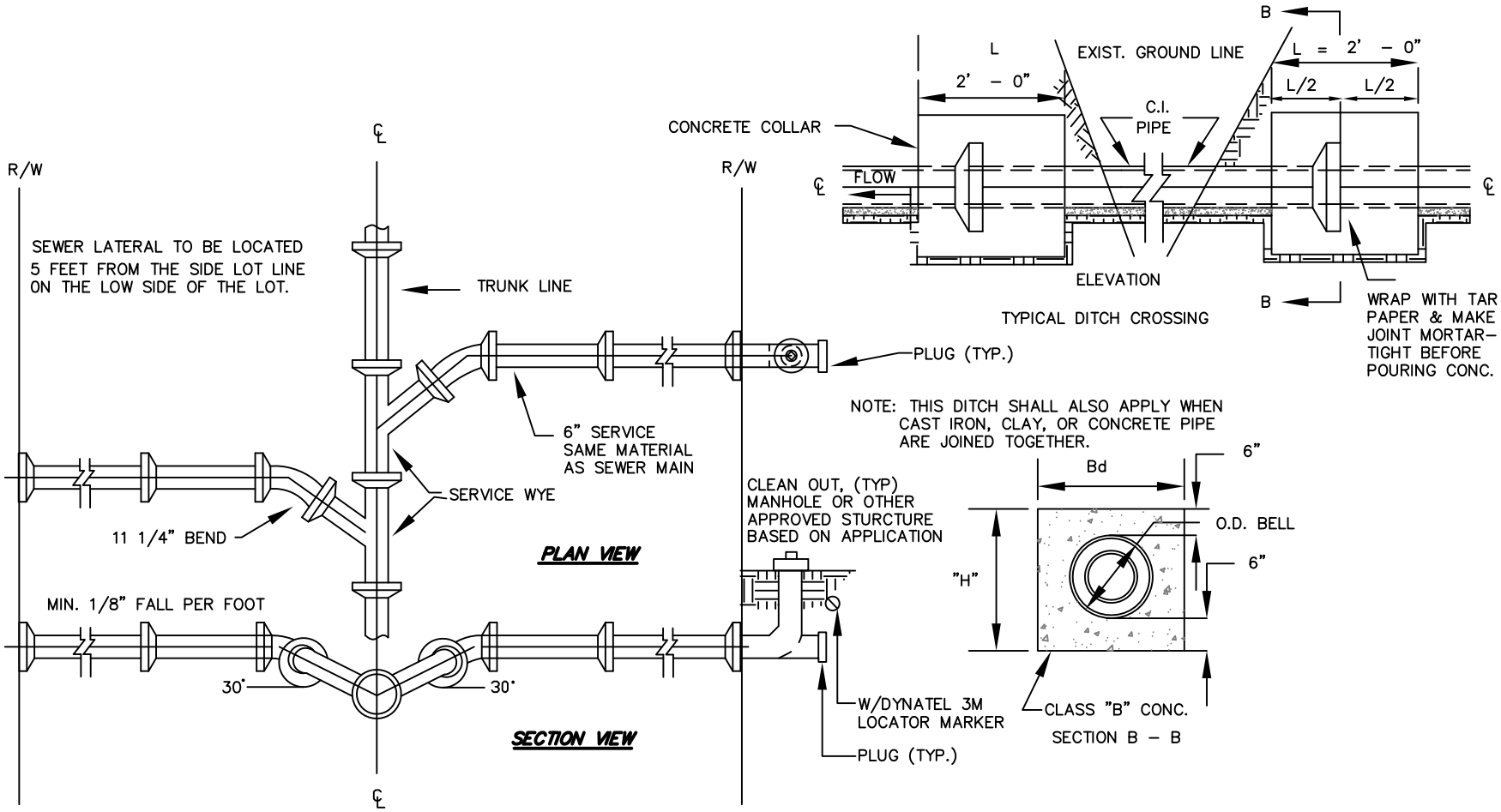

SEWER SERVICE LATERAL

CITY OF FAIRBURN
WATER & SEWER
56 MALONE STREET
FAIRBURN, GEORGIA 30213
770–964–2244

SEWER LATERALS INSTALLATION

S–0002

DESIGNED: J.F.C.	DRAWN:
DATE: 01/15	SCALE: N.T.S.

BY	REVISIONS	DATE

SECTION A–A

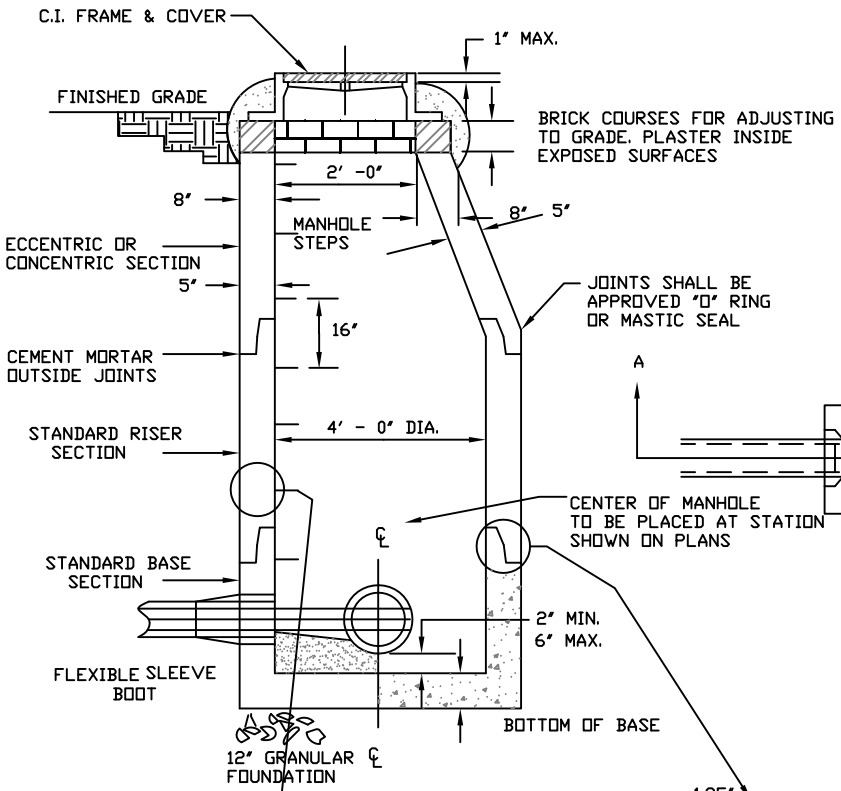

SECTION VIEW

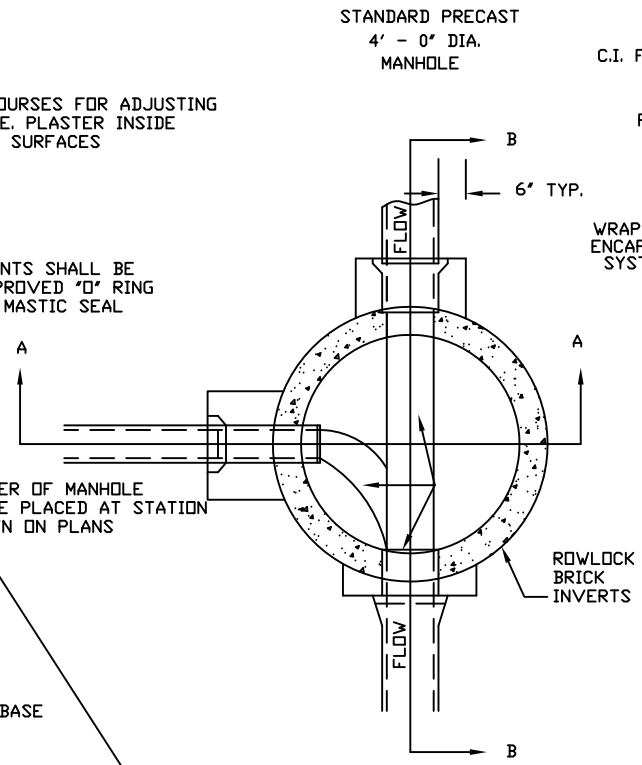

SECTION B–B

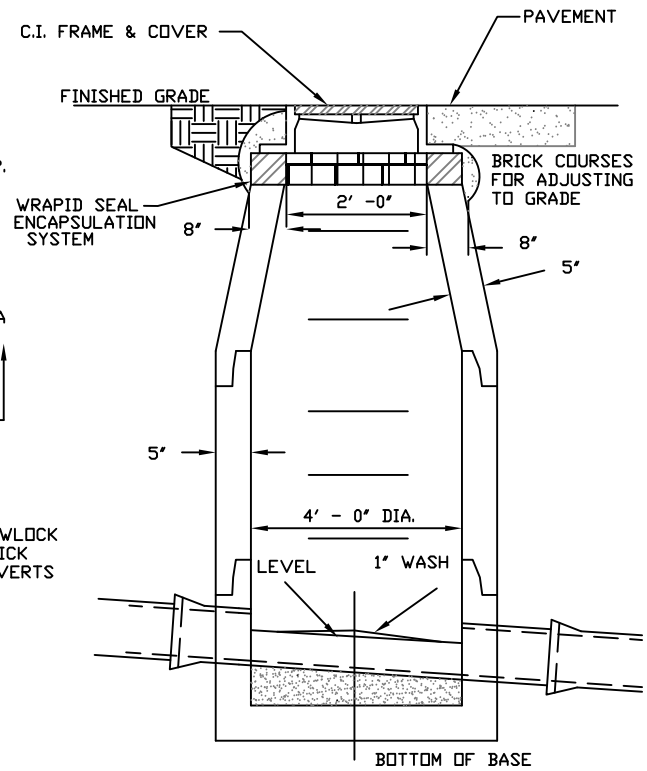

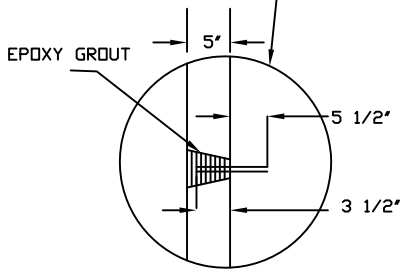

TYPICAL STEP

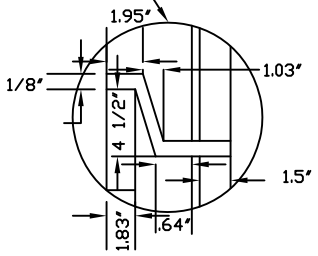

TYPICAL JOINT

CITY OF FAIRBURN
WATER & SEWER
56 MALONE STREET
FAIRBURN, GEORGIA 30213
770–964–2244

STANDARD SEWER MANHOLES PRECAST CONCRETE

S–0003

DESIGNED: J.F.C.	DRAWN:
DATE: 01/15	SCALE: N.T.S.

BY	REVISIONS	DATE

CHART "A"

MIN. DIMENSIONS			
MH	4'-0"	5'-0"	6'-0"
A	48"	60"	72"
B	58"	60"	72"
C	5"	6"	7"
D	6"	8"	10"

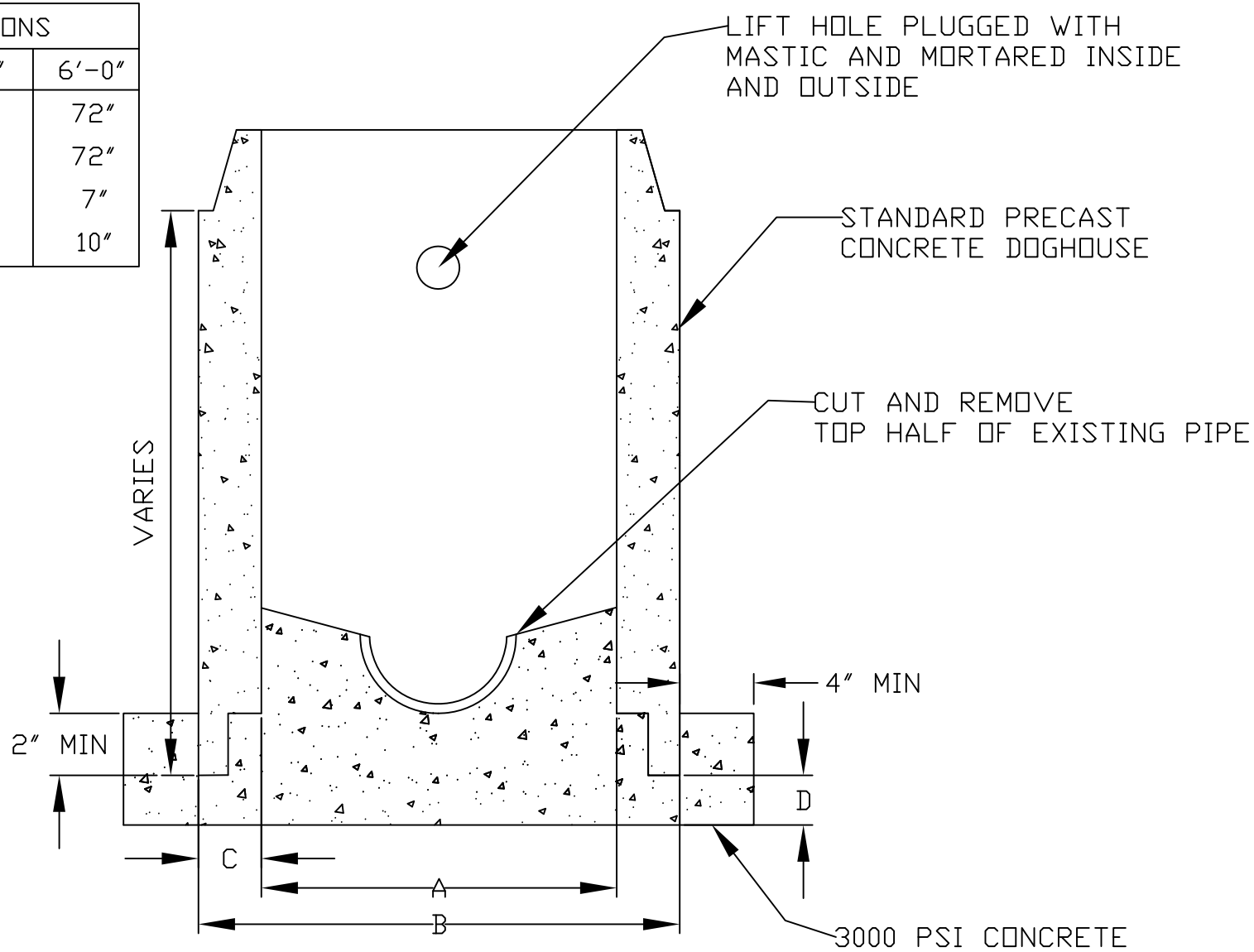

CITY OF FAIRBURN
WATER & SEWER
56 MALONE STREET
FAIRBURN, GEORGIA 30213
770-964-2244

PRECAST CONCRETE MANHOLE DOGHOUSE

S-0004

DESIGNED: J.F.C. DRAWN:
DATE: 01/15 SCALE: N.T.S.

BY	REVISIONS	DATE
C.C.	C.C. "D" THICKER	03/08
C.C.	TEXT	02/12

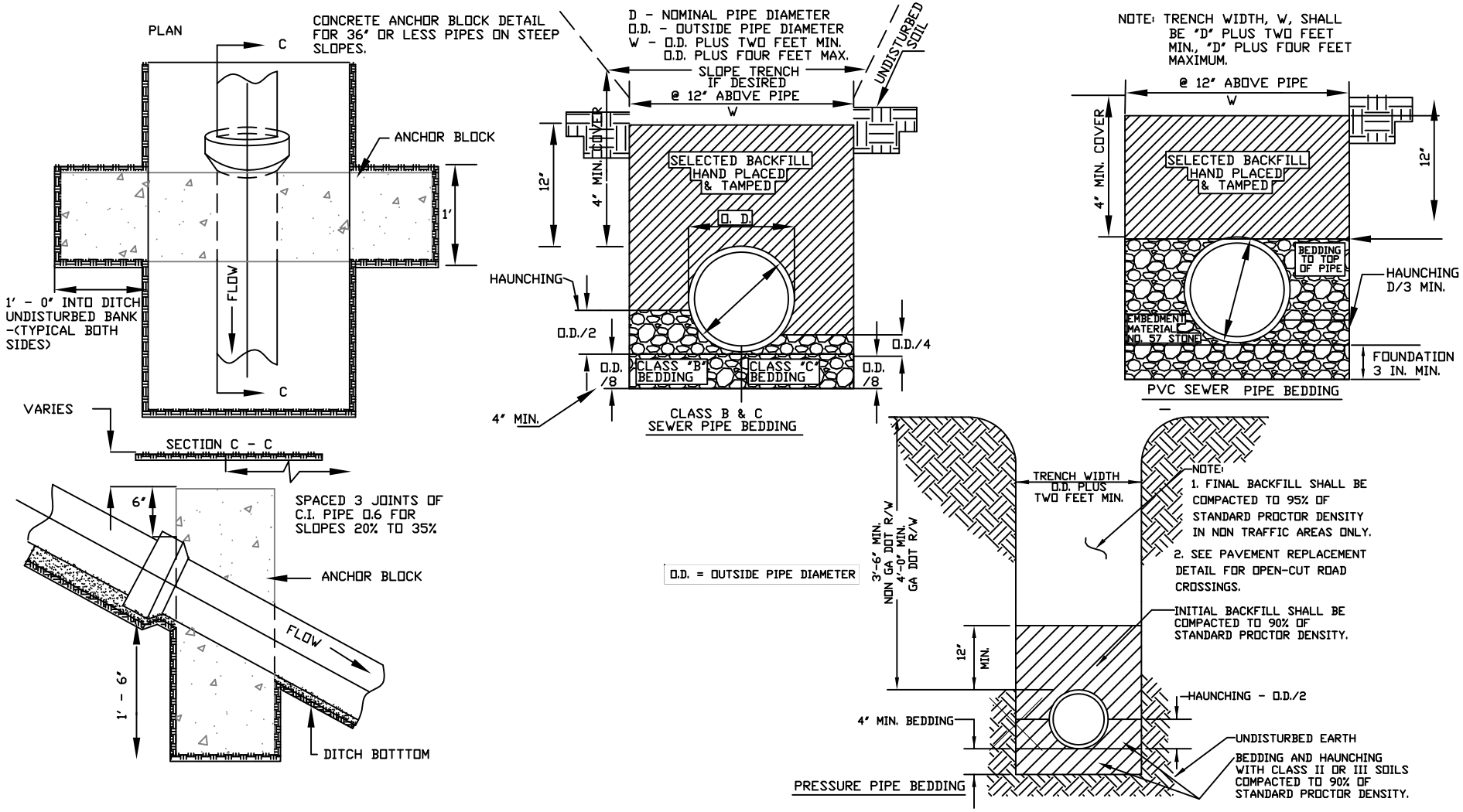

CITY OF FAIRBURN
WATER & SEWER
56 MALONE STREET
FAIRBURN, GEORGIA 30213
770-964-2244

STANDARD SEWER PIPE SEWER DATA

S-0005

DESIGNED: J.F.C.	DRAWN:
DATE: 01/15	SCALE: N.T.S.

BY	REVISIONS	DATE

WIDTH OF CONCRETE EQUALS D1 + 18

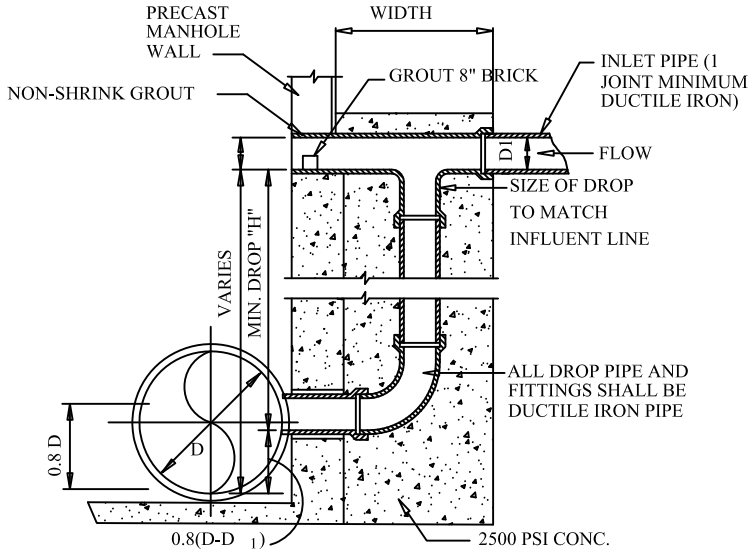

SECTION A-A

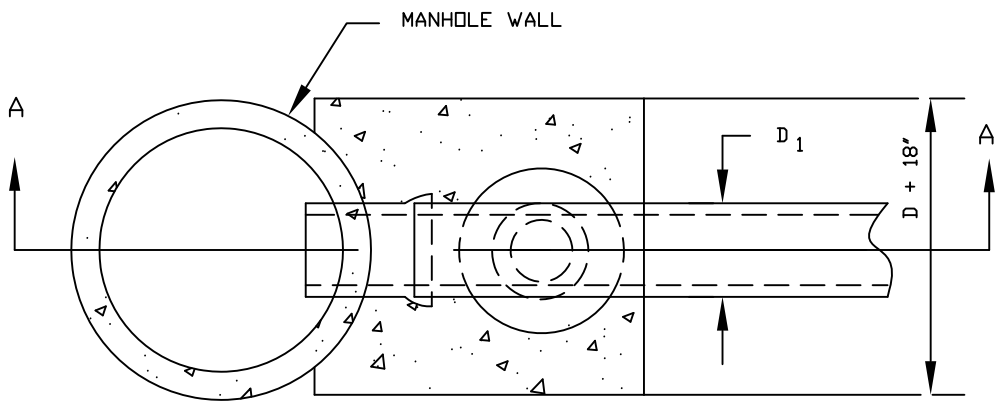

MIN. DROP "H"	
PIPE DIA.	DROP
8"	2'-3.5"
10"	2'-8"
12"	2'-11"

NOTE: WIDTH & BREADTH OF CONCRETE EQUALS D_1 + 18"

CITY OF FAIRBURN
WATER & SEWER
56 MALONE STREET
FAIRBURN, GEORGIA 30213
770-964-2244

OUTSIDE DROP MANHOLE

S-0006

DESIGNED: J.F.C.	DRAWN:
DATE: 01/15	SCALE: N.T.S.

BY	REVISIONS	DATE

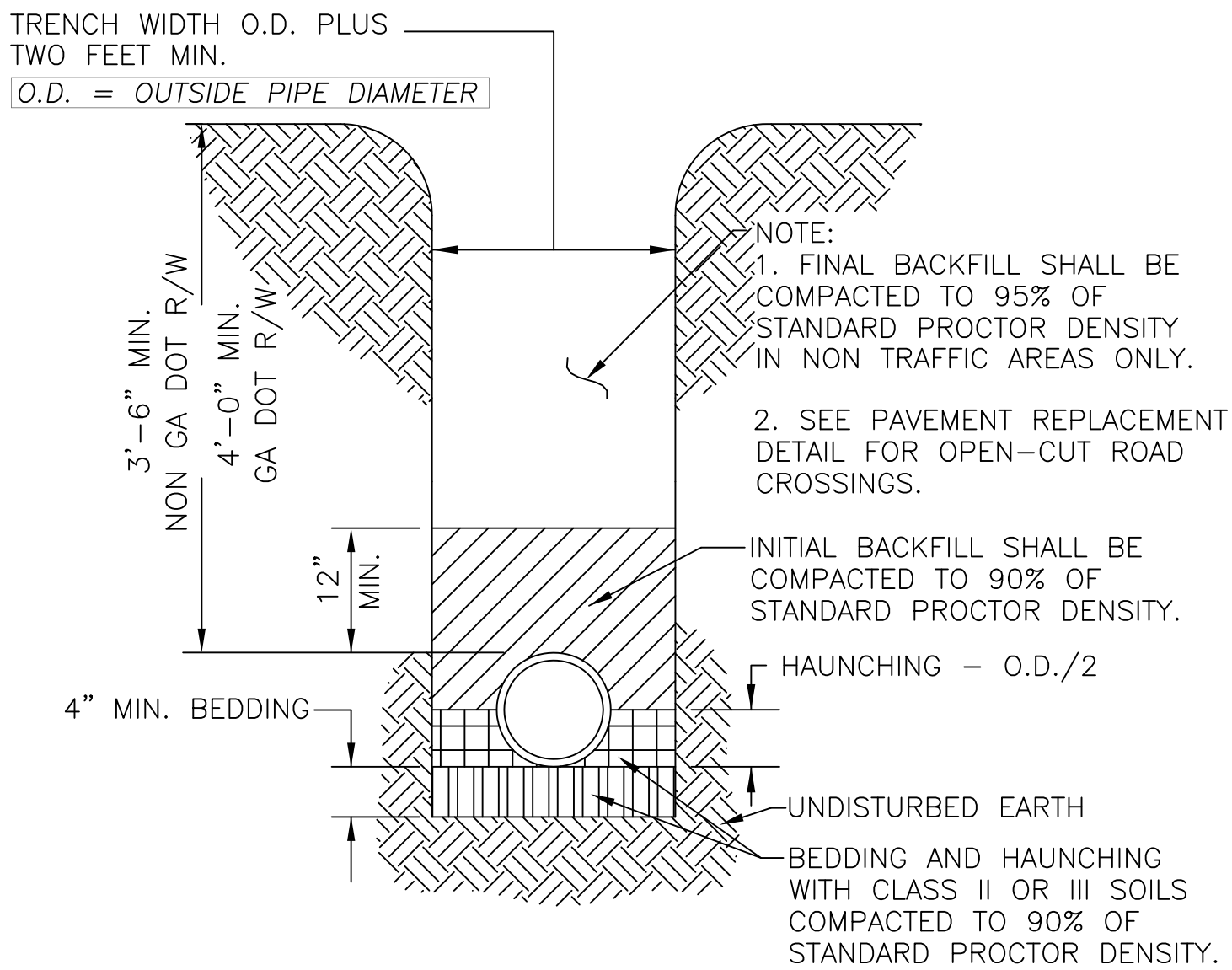

CITY OF FAIRBURN
WATER & SEWER
56 MALONE STREET
FAIRBURN, GEORGIA 30213
770-964-2244

FORCE MAIN BEDDING DETAIL

S-0008

DESIGNED: J.F.C.	DRAWN:
DATE: 01/15	SCALE: N.T.S.

BY	REVISIONS	DATE

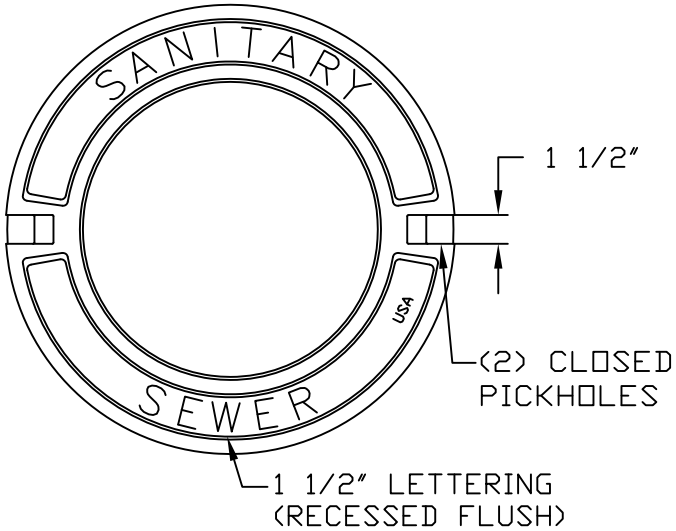

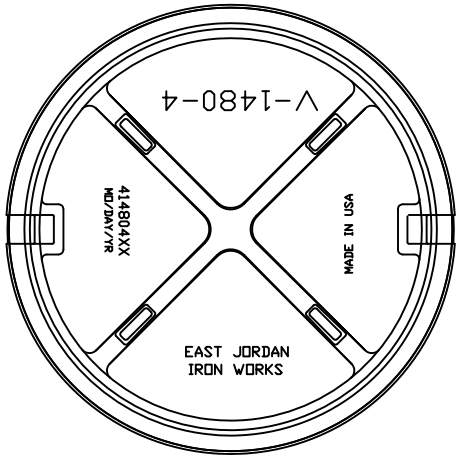

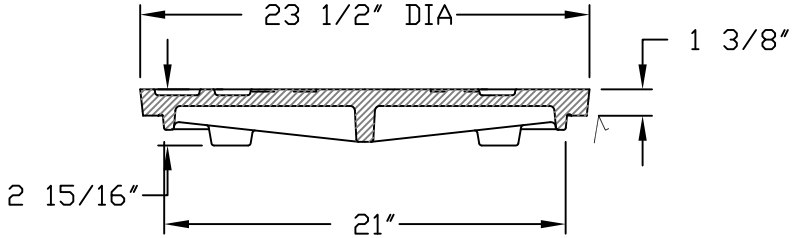

COVER SECTION

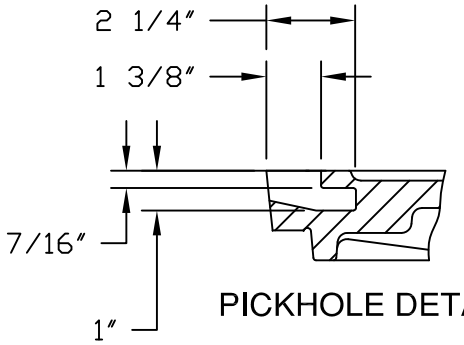

PICKHOLE DETAIL

EJIW EAST JORDAN IRON WORKS EST.1883
800-626-4653
www.ejiw.com
MADE IN USA

PRODUCT NUMBER
NCR08-667A

CATALOG NUMBER
V1480-4

MANHOLE COVER

LOAD RATING
HEAVY DUTY

COATING
UNDIPPED

MATERIAL SPECIFICATION
COVER - GRAY IRON
ASTM A48 CL35B

OPEN AREA
N/A

√DESIGNATES MACHINED SURFACE

DRAWN	DATE
GAD	03/31/08
LAST REVISED	DATE

REFERENCE INFORMATION

CONFIDENTIAL: This drawing is the property of East Jordan Iron Works, Inc. and embodies confidential information, trade secret information, and/or know how that is the property of East Jordan Iron Works, Inc. C Copyright 2007 East Jordan Iron Works, Inc.

CITY OF FAIRBURN
WATER & SEWER
56 MALONE STREET
FAIRBURN, GEORGIA 30213
770-964-2244

MANHOLE COVER (HEAVY DUTY)

S-0009A

DESIGNED: J.F.C.	DRAWN:
DATE: 01/15	SCALE: N.T.S.

BY	REVISIONS	DATE

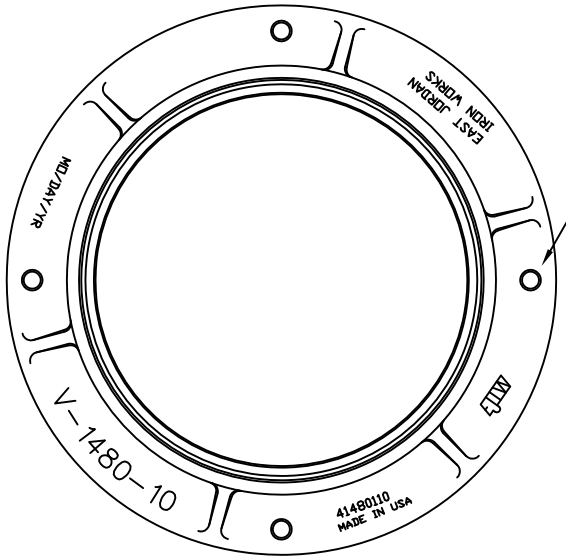

(4) 1" (25mm) DIA HOLES ON 29 1/4" (743mm) DIA BOLT CIRCLE.

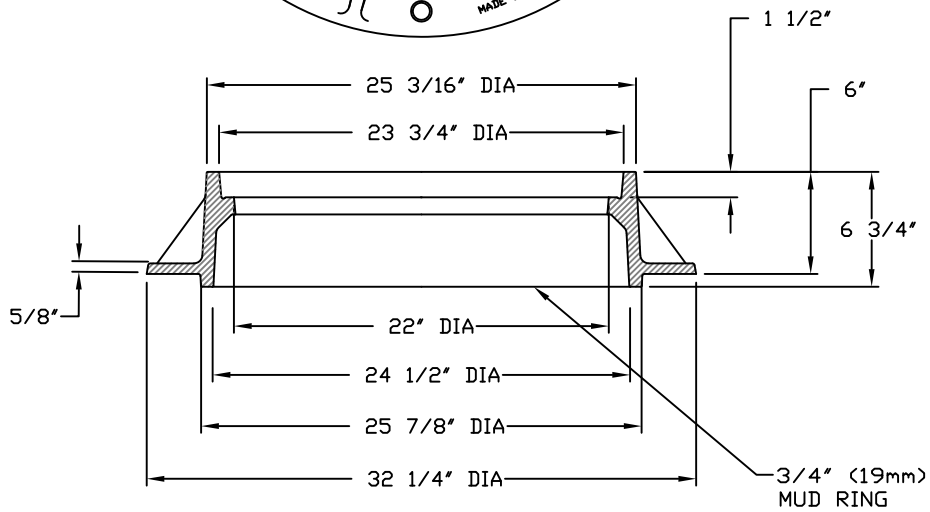

FRAME SECTION

√ MACHINED SURFACE

EAST JORDAN IRON WORKS, INC.
P.O. BOX 439
EAST JORDAN, MI. 49727
1-800-874-4100
FAX 231-536-4458

DRAWN	DATE
SBB/SMH	10/03/02
APPROVED	DATE

MANHOLE FRAME V-1480-10 WITH 3/4" MUD RING

PRODUCT NO.
41480110

CATALOG NO.
V-1480-10

REF. PRODUCT DRAWING
41480110

EST. WT.
FRAME: 181 LBS 82kg

OPEN AREA
N/A

MAT'L SPEC.
FRAME - GRAY IRON ASTM A48 CL35

LOAD RATING
HEAVY DUTY

CITY OF FAIRBURN
WATER & SEWER
56 MALONE STREET
FAIRBURN, GEORGIA 30213
770-964-2244

MANHOLE FRAME

S-0009B

DESIGNED: J.F.C.	DRAWN:
DATE: 01/15	SCALE: N.T.S.

BY	REVISIONS	DATE

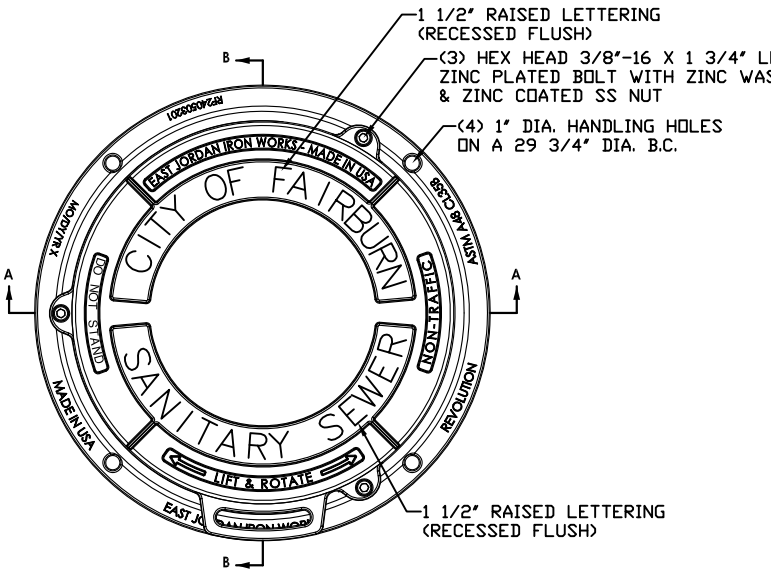

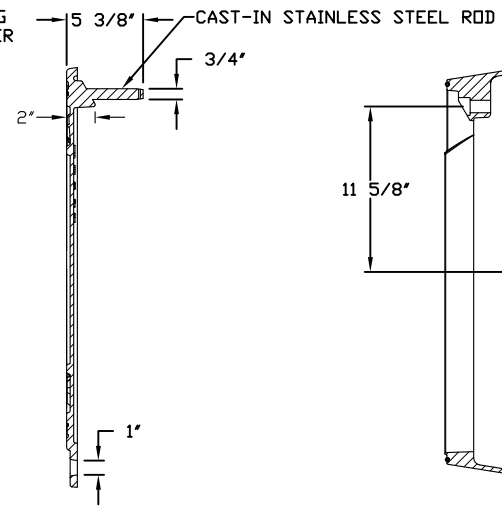

COVER SECTION B-B

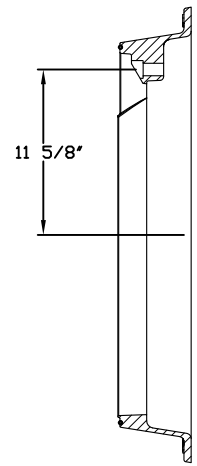

FRAME SECTION B-B

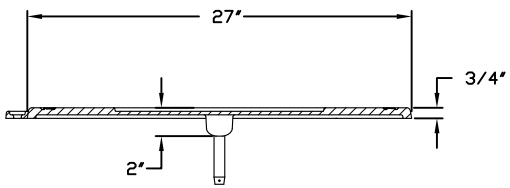

COVER SECTION A-A

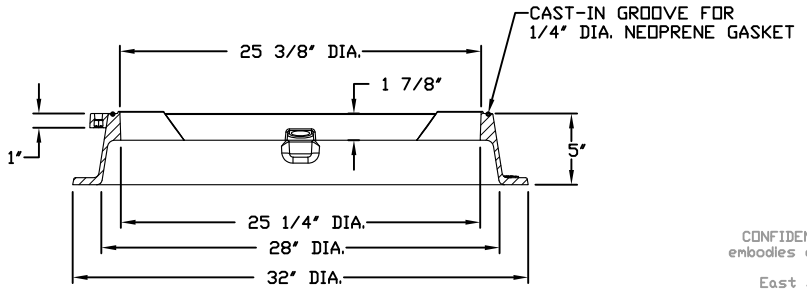

FRAME SECTION A-A

CONFIDENTIAL: This drawing is the property of East Jordan Iron Works, Inc. and embodies confidential information, trade secret information, and/or know how that is the property of
East Jordan Iron Works, Inc. © Copyright 2007 East Jordan Iron Works, Inc.

EJIW EAST JORDAN IRON WORKS EST.1883
800-626-4653
www.ejiw.com
MADE IN USA

PRODUCT NUMBER
NCR08-667F

CATALOG NUMBER
(3) BOLT REVOLUTION COVER
(3) BOLT REVOLUTION FRAME

(3) BOLT WATERTITE ASSEMBLY

LOAD RATING
NON-TRAFFIC
OUTFALL USE ONLY

COATING
UNDIPPED

MATERIAL SPECIFICATION
COVER - GRAY IRON
ASTM A48 CL35B
FRAME - GRAY IRON
ASTM A48 CL35B

OPEN AREA
N/A

√ DESIGNATES MACHINED SURFACE

DRAWN	DATE
GAD	08/27/08
LAST REVISED	DATE

REFERENCE INFORMATION

CITY OF FAIRBURN
WATER & SEWER
56 MALONE STREET
FAIRBURN, GEORGIA 30213
770-964-2244

OUTFALL MANHOLE FRAME & COVER

S-0012

DESIGNED: J.F.C. DRAWN:
DATE: 01/15 SCALE: N.T.S.

BY	REVISIONS	DATE
CHC	ADDED DET.	08/08
CHC	NOTES	02/12

DETAIL VIEW

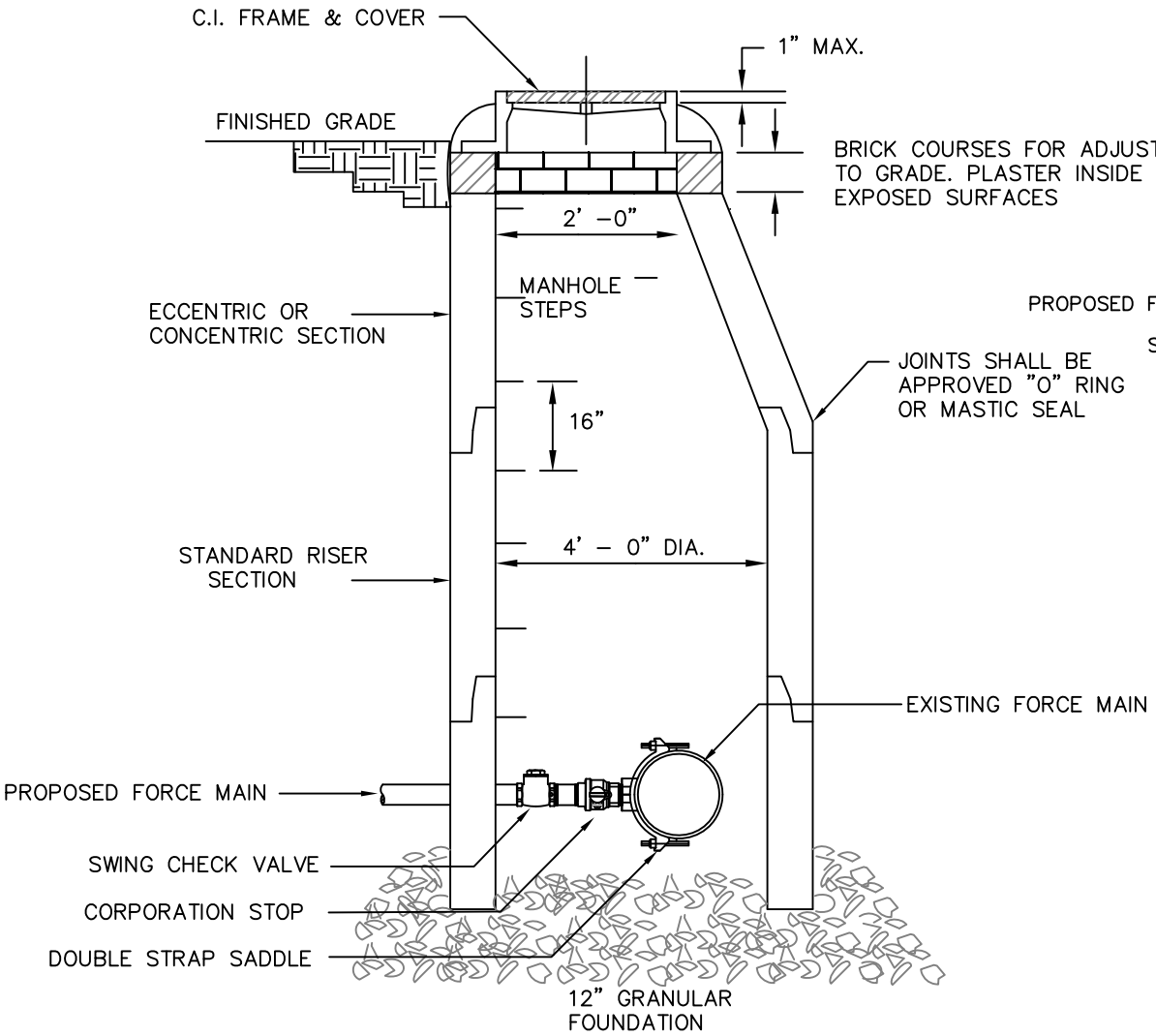

SCHEMATIC VIEW

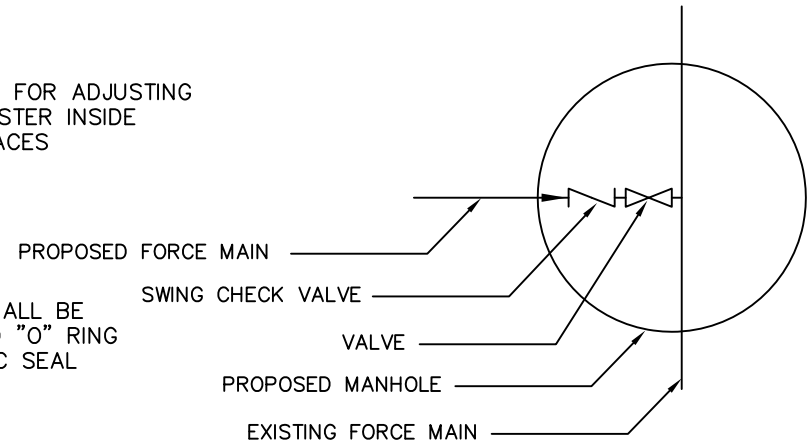

CITY OF FAIRBURN
WATER & SEWER
56 MALONE STREET
FAIRBURN, GEORGIA 30213
770-964-2244

EXISTING FORCE MAIN TIE-IN DETAIL

S-0014

DESIGNED: J.F.C.	DRAWN:
DATE: 01/15	SCALE: N.T.S.

BY	REVISIONS	DATE

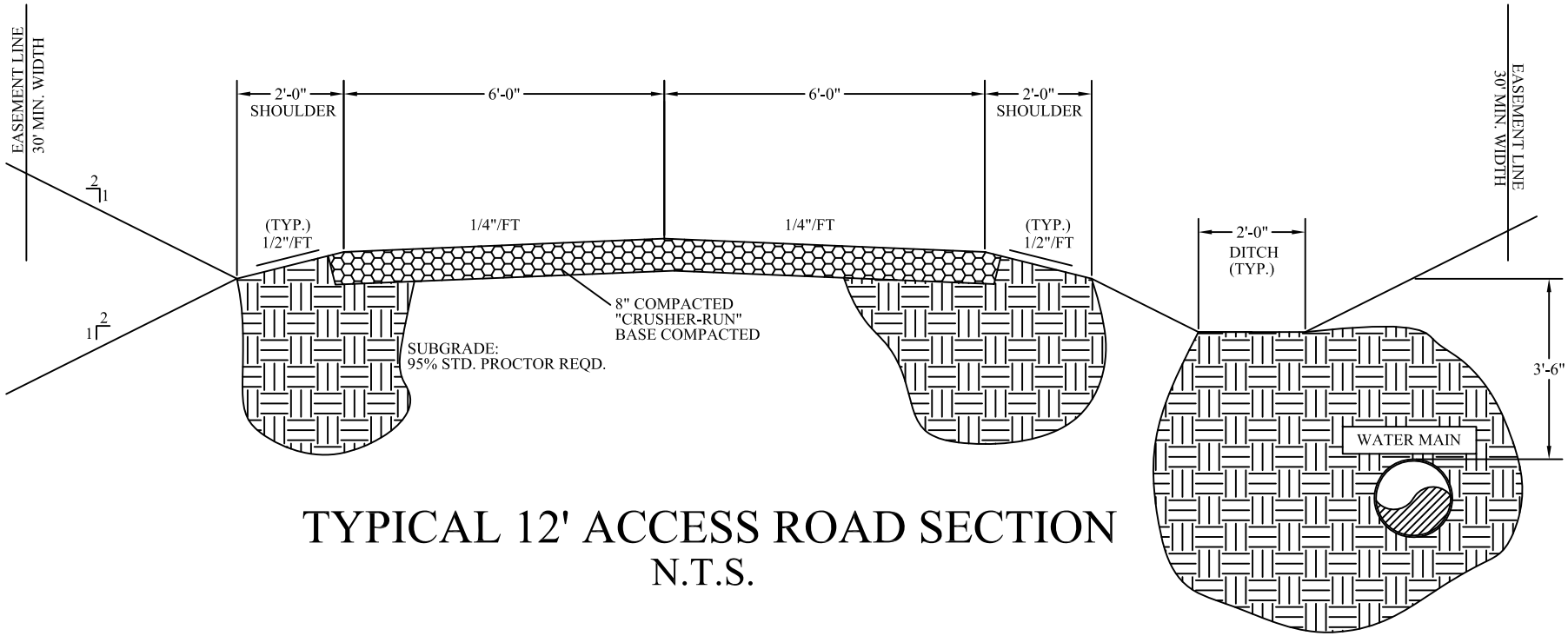

TYPICAL 12' ACCESS ROAD SECTION

N.T.S.

CITY OF FAIRBURN
WATER & SEWER
56 MALONE STREET
FAIRBURN, GEORGIA 30213
770-964-2244

12' ACCESS ROAD INSTALLATION

U-0001

DESIGNED: J.F.C.	DRAWN:
DATE: 01/15	SCALE: N.T.S.

BY	REVISIONS	DATE
CHC	TEXT	03/12

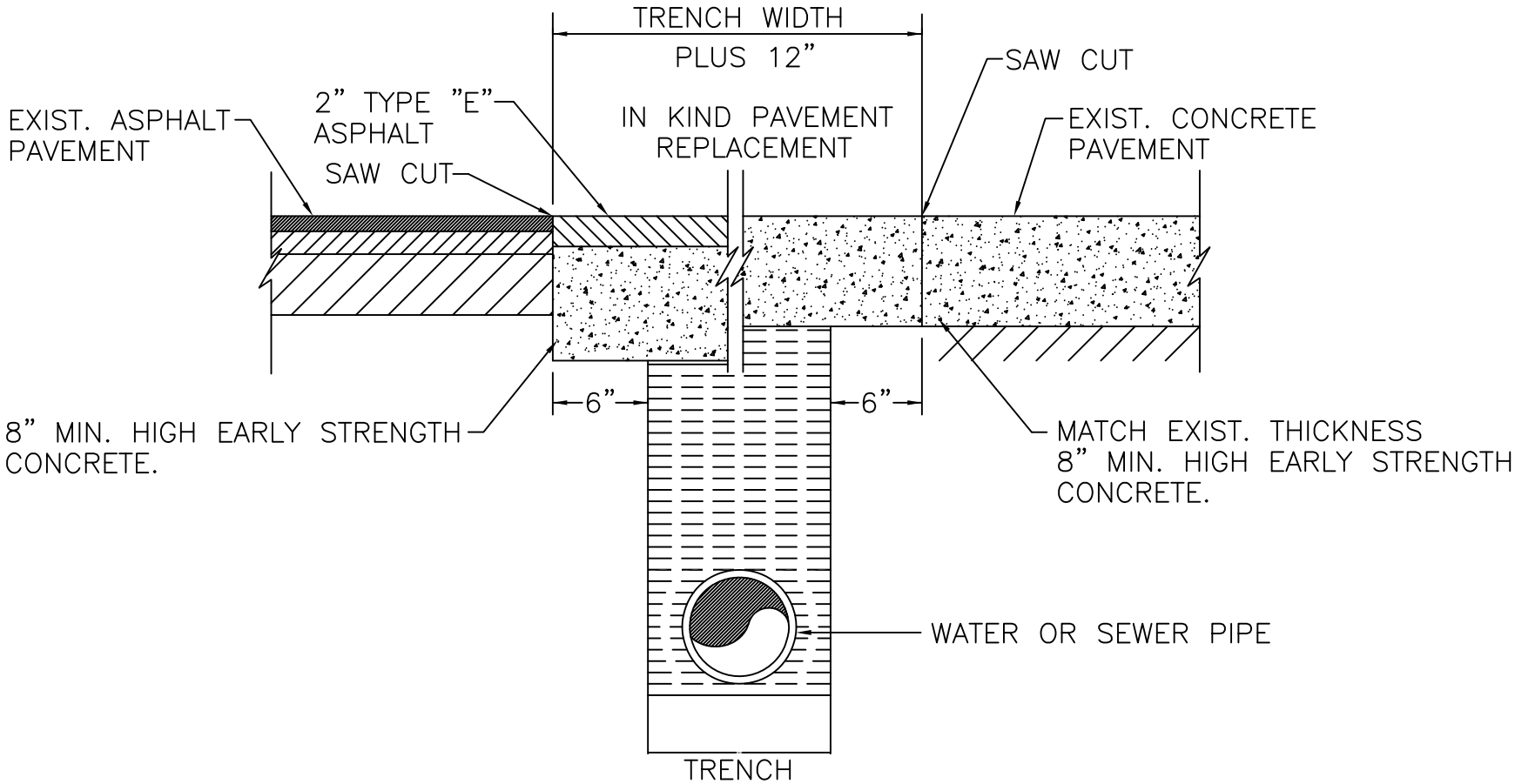

NOTE: TRENCH TO BE BACKFILLED IN MAXIMUM 8" (LOOSE) LIFTS AND THOROUGHLY COMPACTED TO NOT LESS THAN 95% STANDARD PROCTOR DENSITY AT OPTIMUM MOISTURE BY METHODS SATISFACTORY TO ENGINEER.

CITY OF FAIRBURN
WATER & SEWER
56 MALONE STREET
FAIRBURN, GEORGIA 30213
770-964-2244

TYPICAL PAVEMENT CUT

U-0002

DESIGNED: J.F.C.	DRAWN:
DATE: 01/15	SCALE: N.T.S.

BY	REVISIONS	DATE

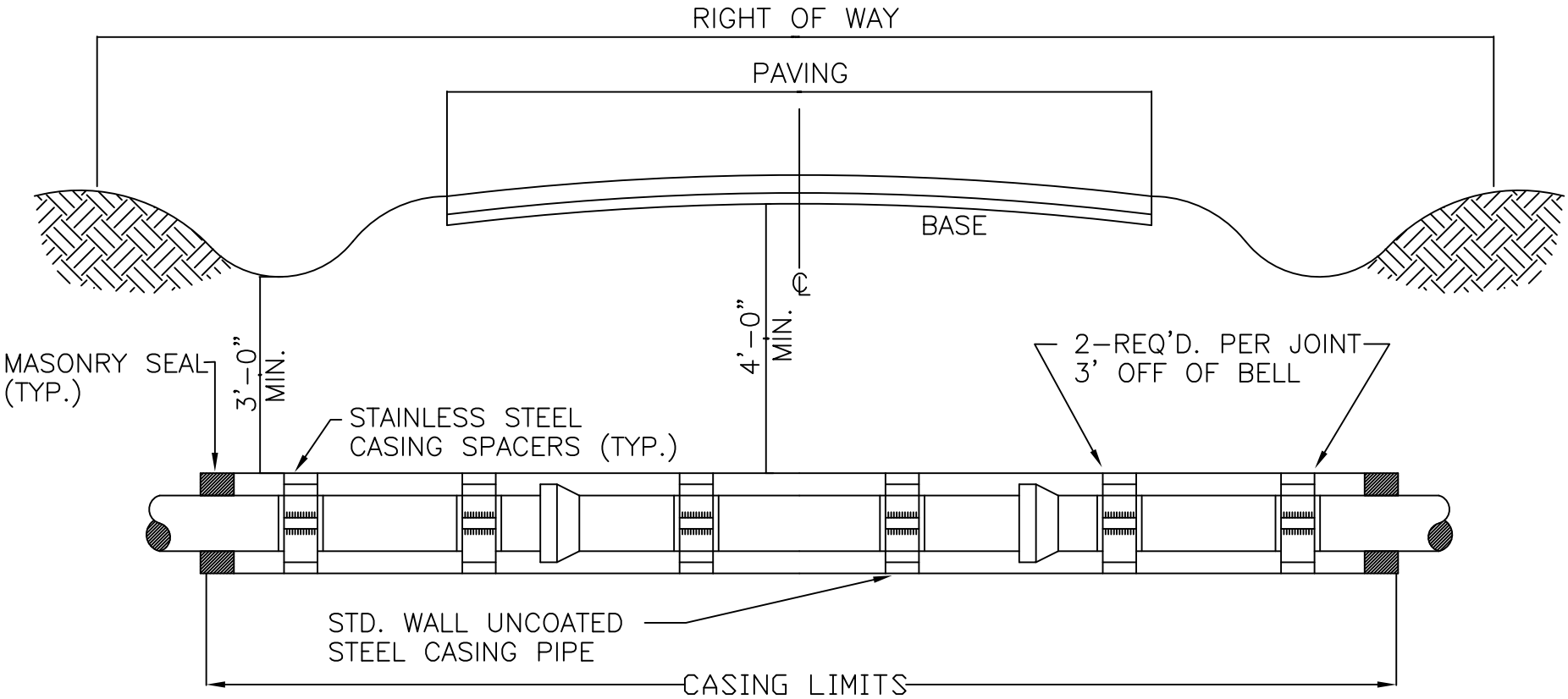

NOTE:
STEEL CASING SHALL EXTEND 3' PAST ℄ OF DITCH

CITY OF FAIRBURN
WATER & SEWER
56 MALONE STREET
FAIRBURN, GEORGIA 30213
770-964-2244

TYPICAL ROAD CROSSING

U-0003

DESIGNED: J.F.C.	DRAWN:
DATE: 01/15	SCALE: N.T.S.

BY	REVISIONS	DATE

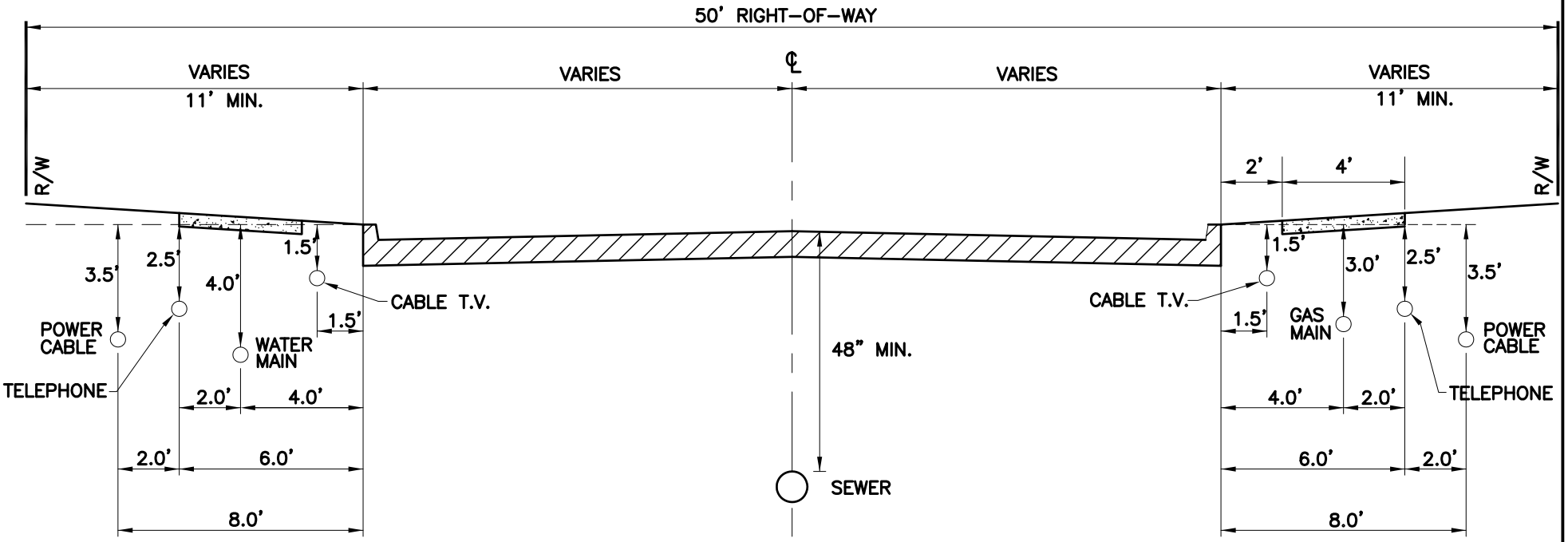

NOTES:

1. THIS STANDARD DETAIL IS TO BE USED FOR UTILITY LOCATIONS WITHIN RIGHT-OF-WAY OF SUBDIVISIONS ONLY.
2. BEFORE ANY UTILITY IS INSTALLED, THE ENTIRE WIDTH OF THE RIGHT-OF-WAY SHALL BE ROUGH GRADED.
3. IN GENERAL, THE DEEPEST UTILITIES SHOULD BE INSTALLED FIRST TO MINIMIZE ANY POSSIBLE INTERFERENCE WITH LATERALS OR SERVICE LINES.
4. IN CUL-DE-SAC OR EYEBROW TURNAROUNDS, THE DIMENSIONS FROM THE CURB SHALL VARY. HOWEVER, THE STANDARD UTILITY SPACING SHALL BE MAINTAINED.
5. BACKFILL OF ALL UTILITY TRENCHES CONSTRUCTED IN THE ROADWAY SHOULDER SHALL BE RETURNED TO 90% COMPACTION.
6. EACH UTILITY SHALL BE RESPONSIBLE FOR REPAIR OF ANY DAMAGE THEY CREATE TO OTHER UTILITY LINES, OR TO THE STREET IMPROVEMENTS WITHIN THE RIGHT-OF-WAY. NO UTILITY SHALL BE RESPONSIBLE FOR DAMAGES TO ANOTHER UTILITY WHICH IS LOCATED OUTSIDE THEIR ASSIGNED SPACE.
7. ANYONE DIGGING IN THE RIGHT-OF-WAY SHALL CALL THE "ONE CALL CENTER" AT 1-(800) 325-5000 TO HAVE UTILITIES LOCATED.
8. ONCE THE ROAD BASE HAS BEEN PLACED, ALL FURTHER INSTALLATION OF UTILITIES UNDER THE ROADWAY SHALL BE BORED.

CITY OF FAIRBURN
WATER & SEWER
56 MALONE STREET
FAIRBURN, GEORGIA 30213
770-964-2244

UTILITY PLACEMENT

U-0005

DESIGNED: J.F.C.	DRAWN:
DATE: 01/15	SCALE: N.T.S.

BY	REVISIONS	DATE

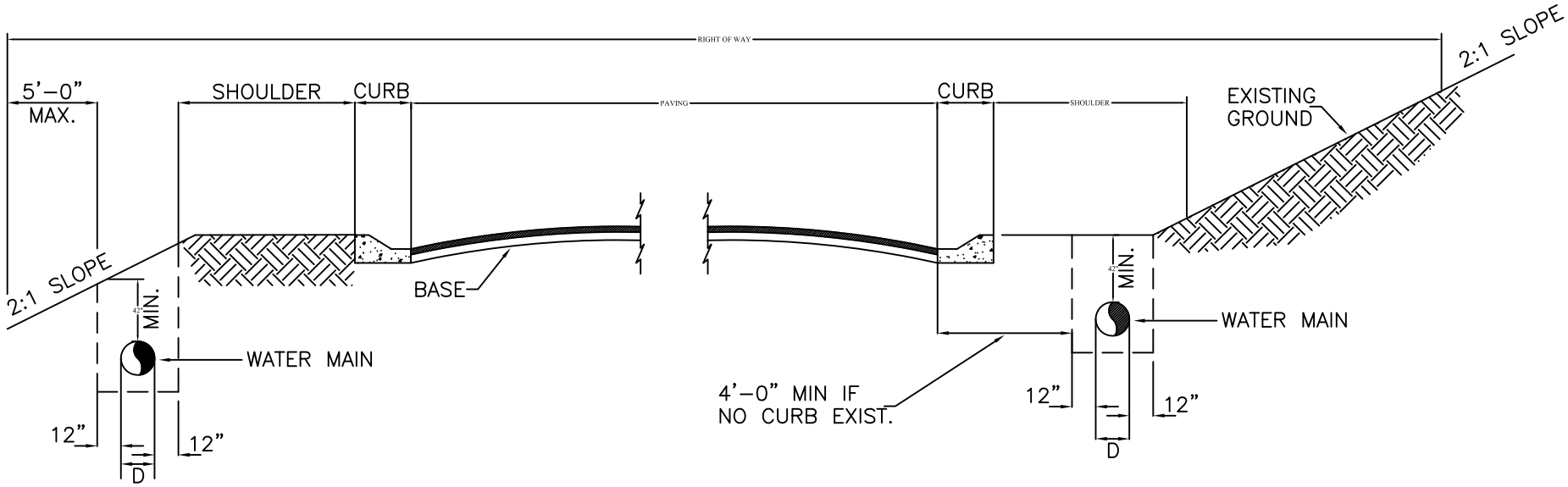

TYPICAL RIGHT-OF-WAY INSTALLATION

N.T.S.

TYPICAL SHOULDER INSTALLATION

N.T.S.

CITY OF FAIRBURN WATER & SEWER 56 MALONE STREET FAIRBURN, GEORGIA 30213 770-964-2244	TYPICAL RIGHT-OF-WAY AND SHOULDER INSTALLATIONS	U-0006			BY
		DESIGNED: J.F.C.	DRAWN:		REVISIONS
		DATE: 01/15	SCALE: N.T.S.		DATE

1. All fittings shall be flanged.
2. Vault shall be precast reinforced concrete and all thickness will be a minimum of 6" (top & sides). Inside height of vault shall be a minimum of 6'.
3. Vault shall be precast for non-load bearing application. When vault will be subjected to a live load, customer's engineer shall submit a detailed vault design for City of Fairburn W&S approval, in advance of construction.
4. Vault top shall be reinforced concrete with a minimum 36" x 36" access opening offset to one side.
5. Vault bottom is 12" of No. 57 compacted stone.
6. Vault inlet/outlet pipe openings shall be sealed with non-shrink grout or mortar, pipe must not support vault. Back-flow prevention (BFP) assembly must be supported in at least three (3) places (support details attached).
7. All minimum clearances shown shall be maintained.
8. All pipe and fittings are to be of ductile iron.
9. Hatch cover to be approved in advance by City of Fairburn Water & Sewerage Authority
10. Access ladder is to be doweled to vault wall and centered at the access opening.
11. Vault shall be installed on private property with right of entry.
12. All materials to be furnished by City of Fairburn Water & Sewerage Authority.
13. Q.T. Ball Valves - equipped with stainless steel handles and nuts.

R-900 MOUNT DETAIL

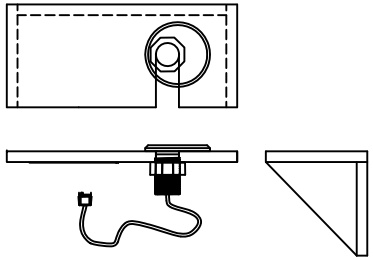

PLAN VIEW

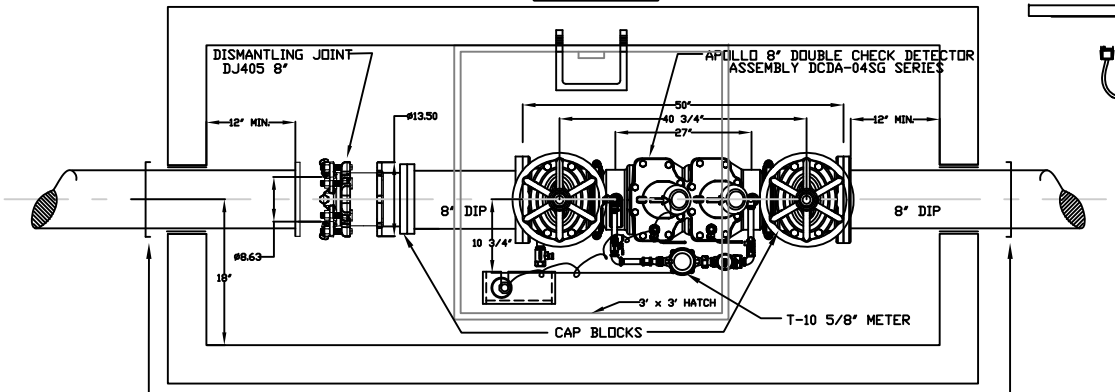

SECTION VIEW

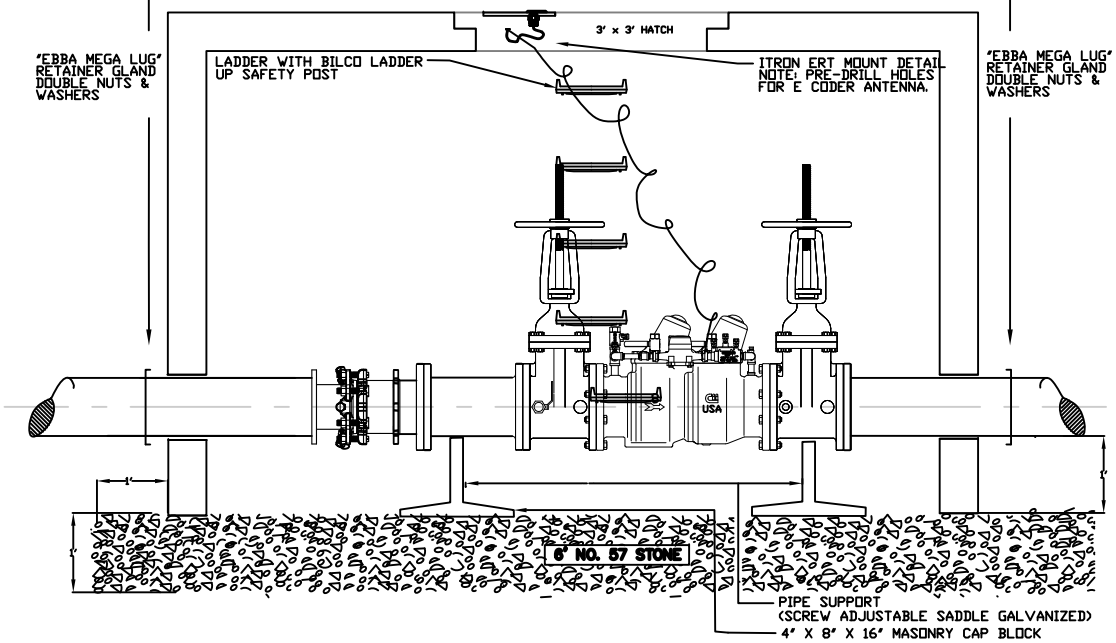

CITY OF FAIRBURN
WATER & SEWER
56 MALONE STREET
FAIRBURN, GEORGIA 30213
770-964-2244

2 1/2" & LARGER DOUBLE CHECK DETECTOR ASSEMBLY (8" REFLECTED ABOVE)

W-0001A

DESIGNED: J.F.C.	DRAWN:
DATE: 01/15	SCALE: N.T.S.

BY	REVISIONS	DATE

1. All fittings shall be flanged.
2. Vault shall be precast reinforced concrete and all thickness will be a minimum of 6" (top & sides). Inside height of vault shall be a minimum of 6'.
3. Vault shall be precast for non-load bearing application. When vault will be subjected to a live load, customer's engineer shall submit a detailed vault design for City of Fairburn W&S approval, in advance of construction.
4. Vault top shall be reinforced concrete with a minimum 36" x 36" access opening offset to one side.
5. Vault bottom is 12" of No. 57 compacted stone.
6. Vault inlet/outlet pipe openings shall be sealed with non-shrink grout or mortar, pipe must not support vault. Back-flow prevention (BFP) assembly must be supported in at least three (3) places (support details attached).
7. All minimum clearances shown shall be maintained.
8. All pipe and fittings are to be of ductile iron.
9. Hatch cover to be approved in advance by City of Fairburn Water & Sewerage Authority
10. Access ladder is to be doweled to vault wall and centered at the access opening.
11. Vault shall be installed on private property with right of entry.
12. All materials to be furnished by City of Fairburn Water & Sewerage Authority.
13. Q.T. Ball Valves - equipped with stainless steel handles and nuts.

PLAN VIEW

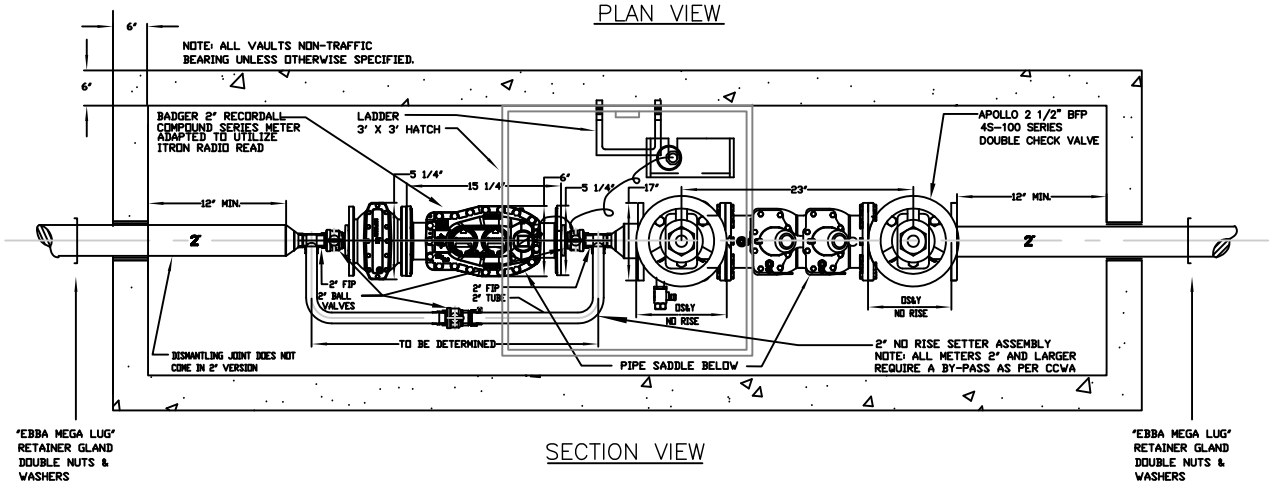

"EBBA MEGA LUG" RETAINER GLAND DOUBLE NUTS & WASHERS

"EBBA MEGA LUG" RETAINER GLAND DOUBLE NUTS & WASHERS

SECTION VIEW

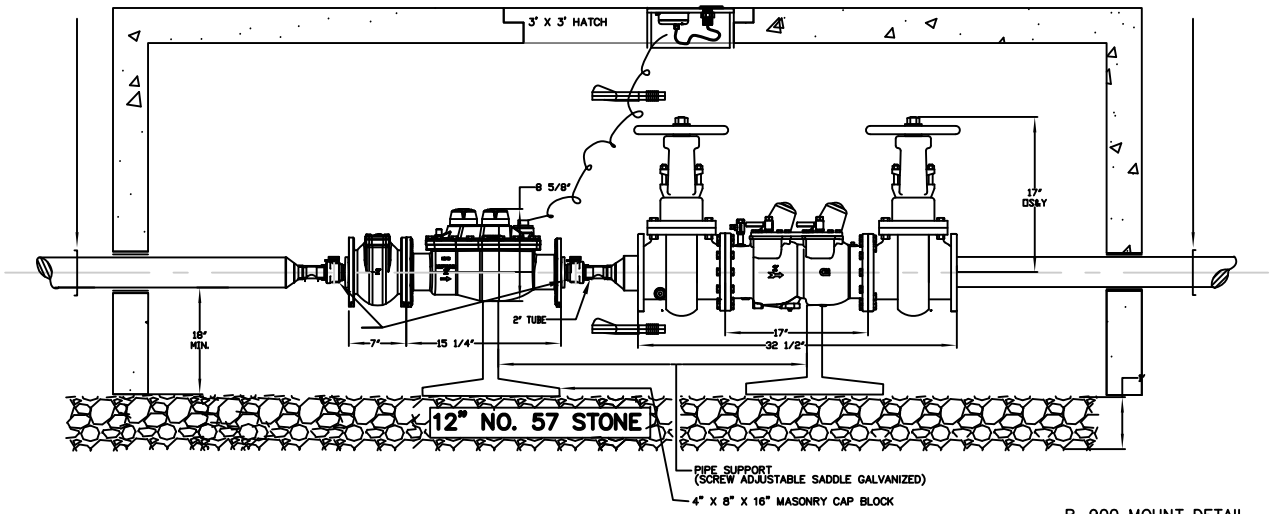

Compound Meters

Size	Normal Operating Range (gpm)	Maximum Continuous Flow (gpm)	Maximum Loss of Head at Max Cont Flow (psi)	Maximum Intermittent Flow (gpm)	Low Flow (gpm)
2"	1/2 - 200	160	8	200	1/8
3"	1/2 - 450	350	8	450	1/8
4"	1 - 1000	700	8	1000	1/2
6"	1 1/2 - 2000	1400	8.5	2000	3/4
6" x 8"	1 1/2 - 2000	2000	10.5	2000	3/4

R-900 MOUNT DETAIL

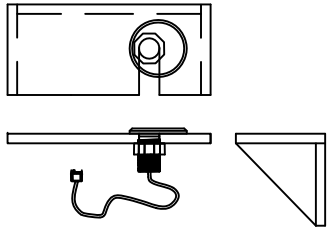

CITY OF FAIRBURN
WATER & SEWER
56 MALONE STREET
FAIRBURN, GEORGIA 30213
770-964-2244

BADGER 2" DOMESTIC METER WITH BACKFLOW PREVENTER

W-0002A

DESIGNED: J.F.C.	DRAWN:
DATE: 01/15	SCALE: N.T.S.

BY	REVISIONS	DATE

1. All fittings shall be flanged.
2. Vault shall be precast reinforced concrete and all thickness will be a minimum of 6" (top & sides). Inside height of vault shall be a minimum of 6'.
3. Vault shall be precast for non-load bearing application. When vault will be subjected to a live load, customer's engineer shall submit a detailed vault design for City of Fairburn W&S approval, in advance of construction.
4. Vault top shall be reinforced concrete with a minimum 36" x 36" access opening offset to one side.
5. Vault bottom is 12" of No. 57 compacted stone.
6. Vault inlet/outlet pipe openings shall be sealed with non-shrink grout or mortar, pipe must not support vault. Back-flow prevention (BFP) assembly must be supported in at least three (3) places (support details attached).
7. All minimum clearances shown shall be maintained.
8. All pipe and fittings are to be of ductile iron.
9. Hatch cover to be approved in advance by City of Fairburn Water & Sewerage Authority
10. Access ladder is to be doweled to vault wall and centered at the access opening.
11. Vault shall be installed on private property with right of entry.
12. All materials to be furnished by City of Fairburn Water & Sewerage Authority.
13. Q.T. Ball Valves - equipped with stainless steel handles and nuts.

PLAN VIEW

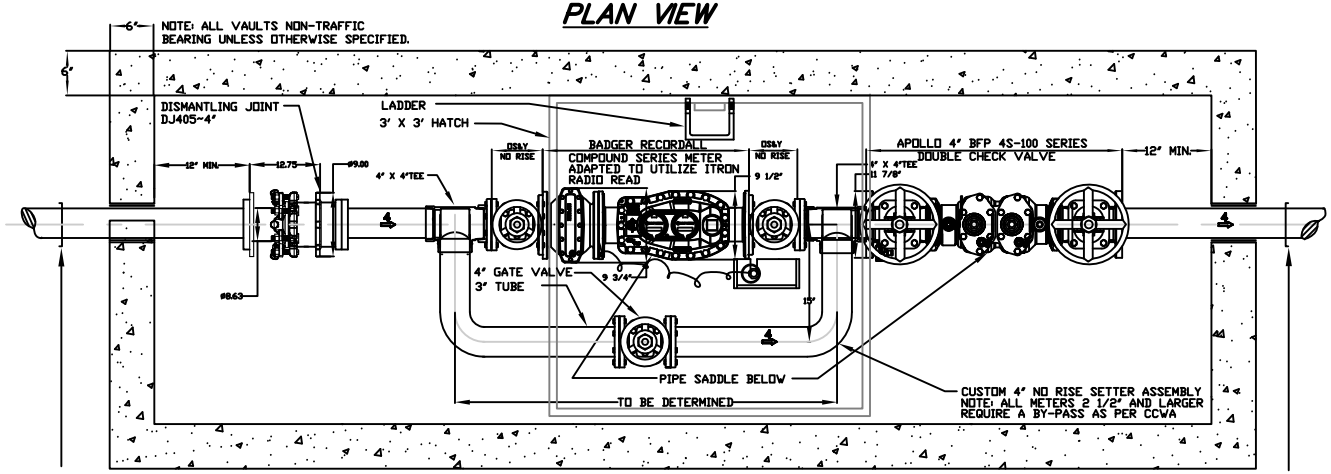

SECTION VIEW

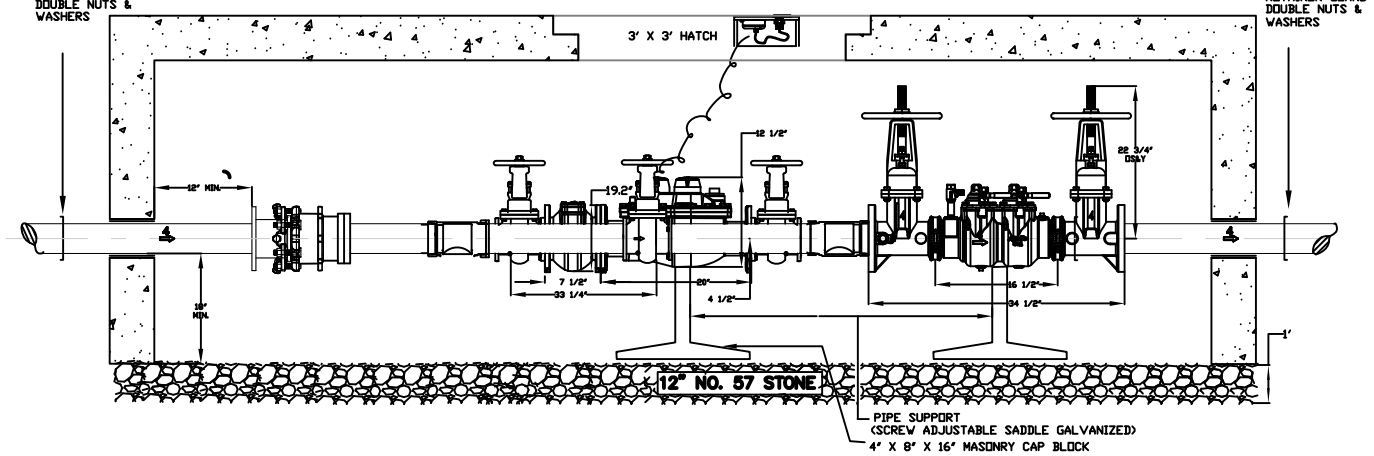

Compound Meters

Size	Normal Operating Range (gpm)	Maximum Continuous Flow (gpm)	Maximum Loss of Head at Max Cont Flow (psi)	Maximum Intermittent Flow (gpm)	Low Flow (gpm)
2"	1/2 - 200	160	8	200	1/8
3"	1/2 - 450	350	8	450	1/8
4"	1 - 1000	700	8	1000	1/2
6"	1 1/2 - 2000	1400	8.5	2000	3/4
6" x 8"	1 1/2 - 2000	2000	10.5	2000	3/4

R-900 MOUNT DETAIL

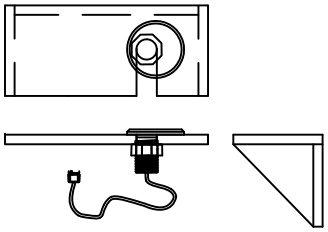

CITY OF FAIRBURN
WATER & SEWER
56 MALONE STREET
FAIRBURN, GEORGIA 30213
770-964-2244

BADGER 3" DOMESTIC METER WITH BACKFLOW PREVENTER

W-0002B

DESIGNED: J.F.C.	DRAWN:
DATE: 01/15	SCALE: N.T.S.

DATE	REVISIONS	BY

1. All fittings shall be flanged.
2. Vault shall be precast reinforced concrete and all thickness will be a minimum of 6" (top & sides). Inside height of vault shall be a minimum of 6'.
3. Vault shall be precast for non-load bearing application. When vault will be subjected to a live load, customer's engineer shall submit a detailed vault design for City of Fairburn W&S approval, in advance of construction.
4. Vault top shall be reinforced concrete with a minimum 36" x 36" access opening offset to one side.
5. Vault bottom is 12" of No. 57 compacted stone.
6. Vault inlet/outlet pipe openings shall be sealed with non-shrink grout or mortar, pipe must not support vault. Back-flow prevention (BFP) assembly must be supported in at least three (3) places (support details attached).
7. All minimum clearances shown shall be maintained.
8. All pipe and fittings are to be of ductile iron.
9. Hatch cover to be approved in advance by City of Fairburn Water & Sewerage Authority
10. Access ladder is to be doweled to vault wall and centered at the access opening.
11. Vault shall be installed on private property with right of entry.
12. All materials to be furnished by City of Fairburn Water & Sewerage Authority.
13. Q.T. Ball Valves - equipped with stainless steel handles and nuts.

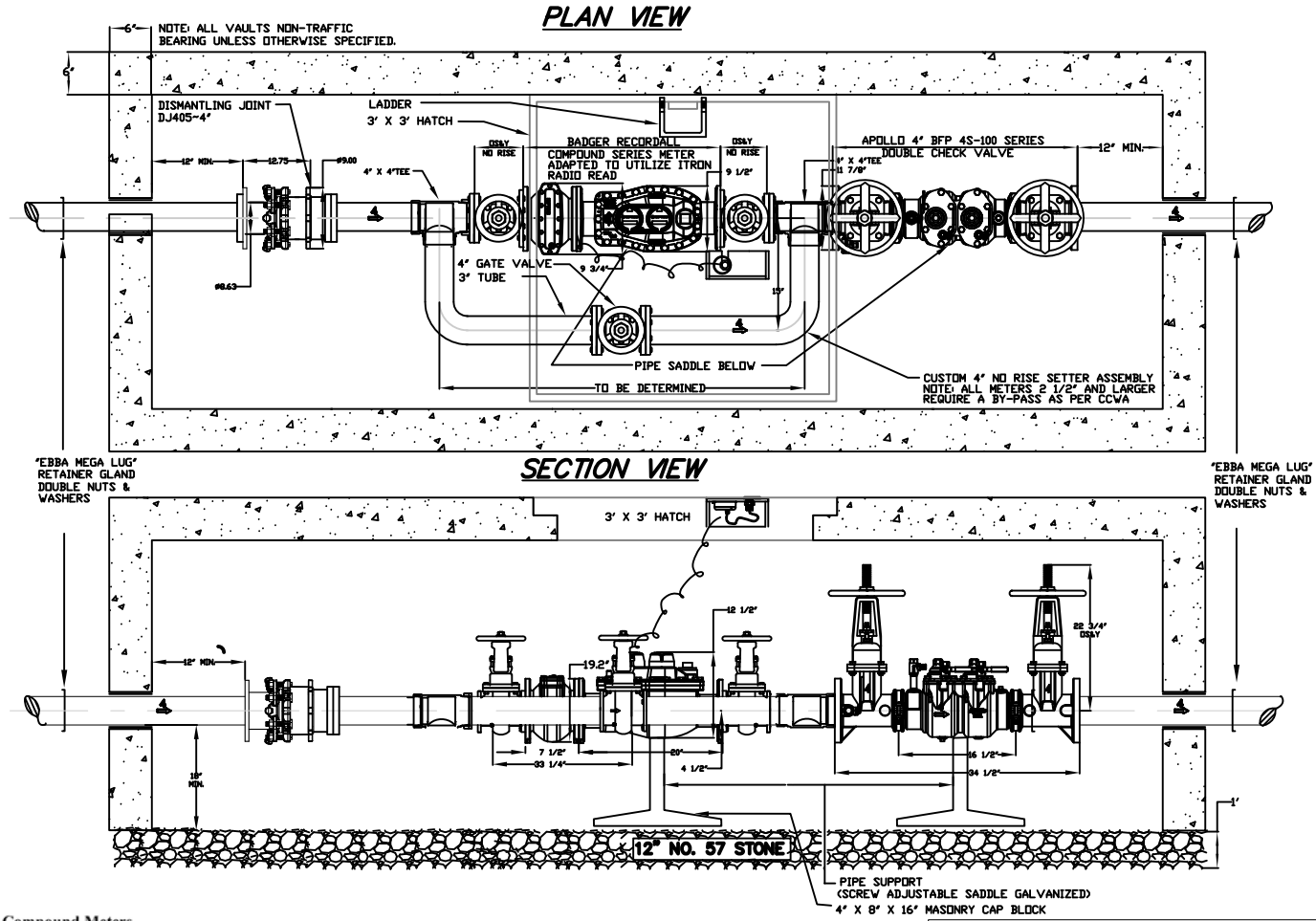

Compound Meters

Size	Normal Operating Range (gpm)	Maximum Continuous Flow (gpm)	Maximum Loss of Head at Max Cont Flow (psi)	Maximum Intermittent Flow (gpm)	Low Flow (gpm)
2"	1/2 - 200	160	8	200	1/8
3"	1/2 - 450	350	8	450	1/8
4"	1 - 1000	700	8	1000	1/2
6"	1 1/2 - 2000	1400	8.5	2000	3/4
6" x 8"	1 1/2 - 2000	2000	10.5	2000	3/4

R-900 MOUNT DETAIL

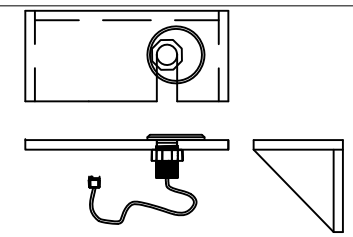

CITY OF FAIRBURN
WATER & SEWER
56 MALONE STREET
FAIRBURN, GEORGIA 30213
770-964-2244

BADGER 4" DOMESTIC METER WITH BACKFLOW PREVENTER

W-0002C

DESIGNED: J.F.C.	DRAWN:
DATE: 01/15	SCALE: N.T.S.

BY	REVISIONS	DATE

1. All fittings shall be flanged.
2. Vault shall be precast reinforced concrete and all thickness will be a minimum of 6" (top & sides). Inside height of vault shall be a minimum of 6'.
3. Vault shall be precast for non-load bearing application. When vault will be subjected to a live load, customer's engineer shall submit a detailed vault design for City of Fairburn W&S approval, in advance of construction.
4. Vault top shall be reinforced concrete with a minimum 36" x 36" access opening offset to one side.
5. Vault bottom is 12" of No. 57 compacted stone.
6. Vault inlet/outlet pipe openings shall be sealed with non-shrink grout or mortar, pipe must not support vault. Backflow prevention (BFP) assembly must be supported in at least three (3) places (support details attached).
7. All minimum clearances shown shall be maintained.
8. All pipe and fittings are to be of ductile iron.
9. Hatch cover to be approved in advance by City of Fairburn Water & Sewerage Authority
10. Access ladder is to be doweled to vault wall and centered at the access opening.
11. Vault shall be installed on private property with right of entry.
12. All materials to be furnished by City of Fairburn Water & Sewerage Authority.
13. Q.T. Ball Valves - equipped with stainless steel handles and nuts.

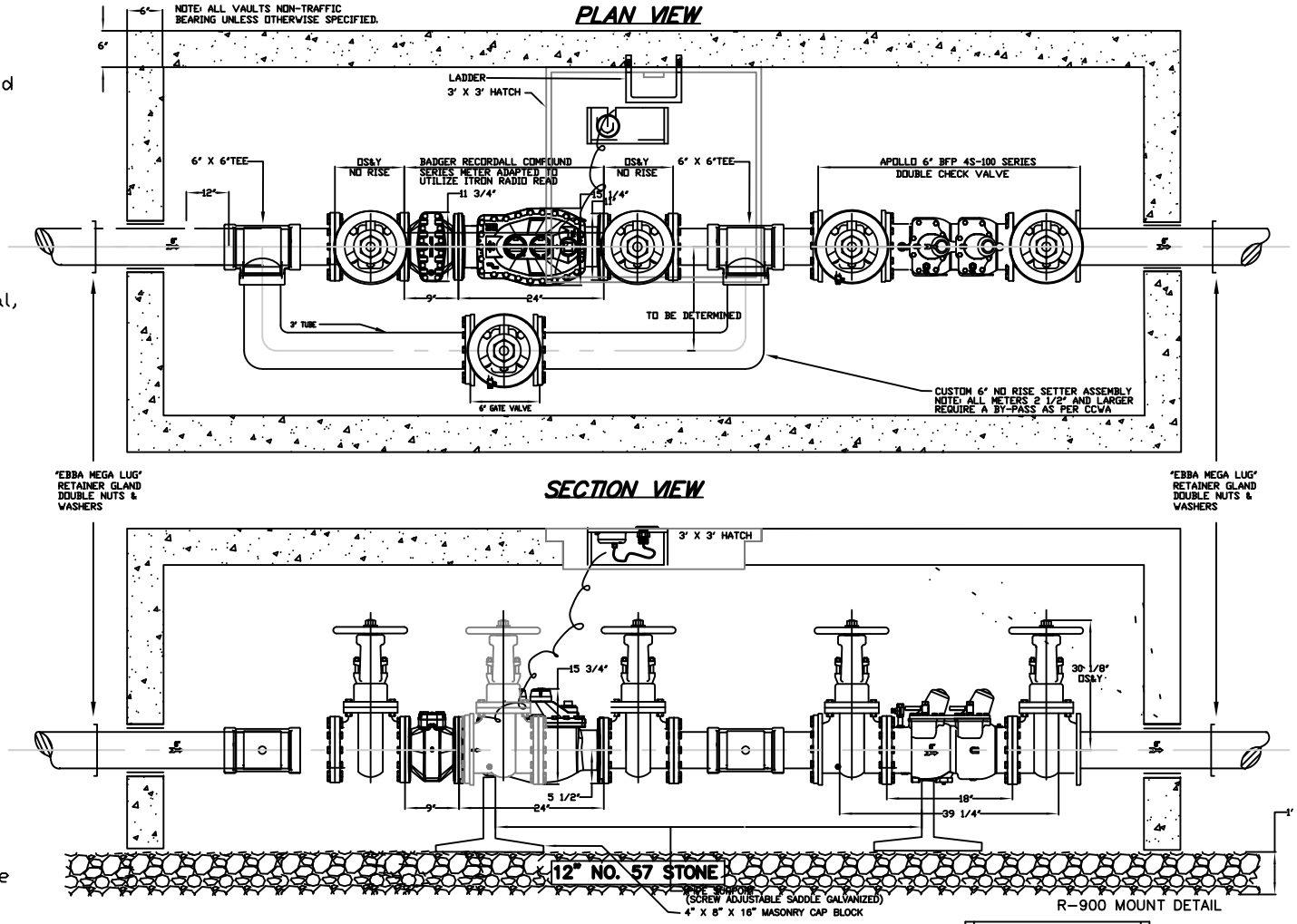

Compound Meters

Size	Normal Operating Range (gpm)	Maximum Continuous Flow (gpm)	Maximum Loss of Head at Max Cont Flow (psi)	Maximum Intermittent Flow (gpm)	Low Flow (gpm)
2"	1/2 - 200	160	8	200	1/8
3"	1/2 - 450	350	8	450	1/8
4"	1 - 1000	700	8	1000	1/2
6"	1 1/2 - 2000	1400	8.5	2000	3/4
6" x 8"	1 1/2 - 2000	2000	10.5	2000	3/4

R-900 MOUNT DETAIL

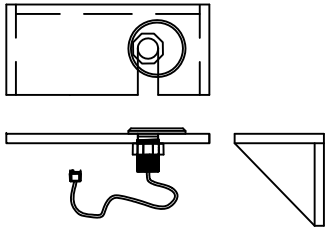

CITY OF FAIRBURN
WATER & SEWER
56 MALONE STREET
FAIRBURN, GEORGIA 30213
770-964-2244

BADGER 6" DOMESTIC METER WITH BACKFLOW PREVENTER

W-0002D

DESIGNED: J.F.C.	DRAWN:
DATE: 01/15	SCALE: N.T.S.

BY	REVISIONS	DATE

1. All fittings shall be flanged.
2. Vault shall be precast reinforced concrete and all thickness will be a minimum of 6" (top & sides). Inside height of vault shall be a minimum of 6'.
3. Vault shall be precast for non-load bearing application. When vault will be subjected to a live load, customer's engineer shall submit a detailed vault design for City of Fairburn W&S approval, in advance of construction.
4. Vault top shall be reinforced concrete with a minimum 36" x 36" access opening offset to one side.
5. Vault bottom is 12" of No. 57 stone.
6. Vault inlet/outlet pipe openings shall be sealed with non-shrink grout or mortar, pipe must not support vault. Back-flow preveention (BFP) assembly must be supported in at least three (3) places (support details attached).
7. All minimum clearances between the vault and the BFP assembly shall be maintained (details attached).
8. All pipe and fittings are to be of ductile iron.
9. Hatch cover: Bilco-aluminum single model XJ-4AL; or equal and approved in advance by City of Fairburn W&S.
10. Acces ladder is to be doweled to vault wall and centered at the access opening.
11. Thrust tie rods shall be bitumastic coated and shall extend from first flange inside vault to tapping valve (welded to casting on long side bore).
12. Vault shall be installed on private property with right of entry.
13. All materials to be furnished by customers/owner.

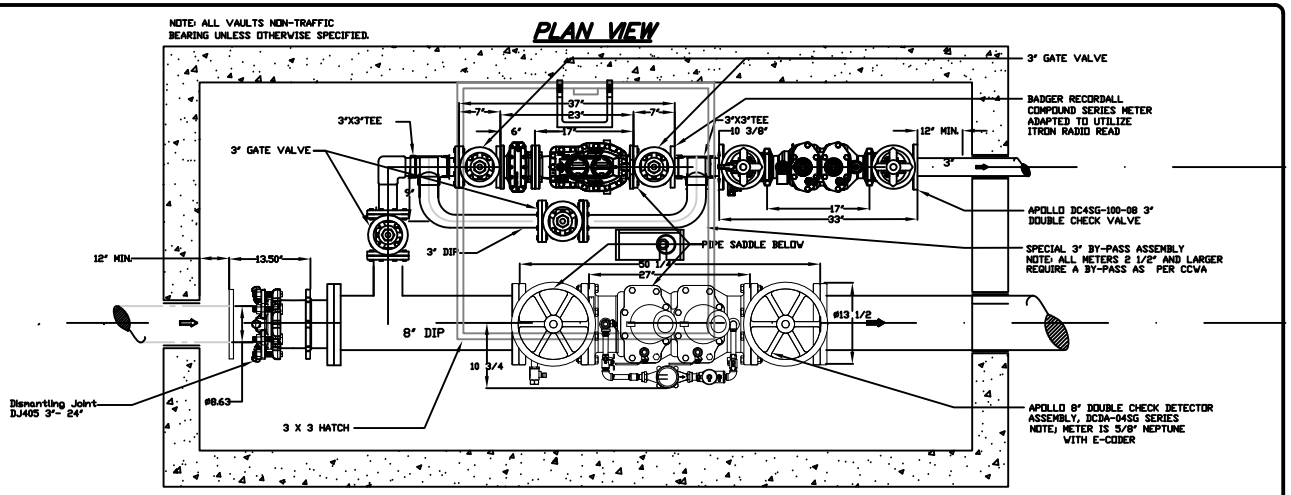

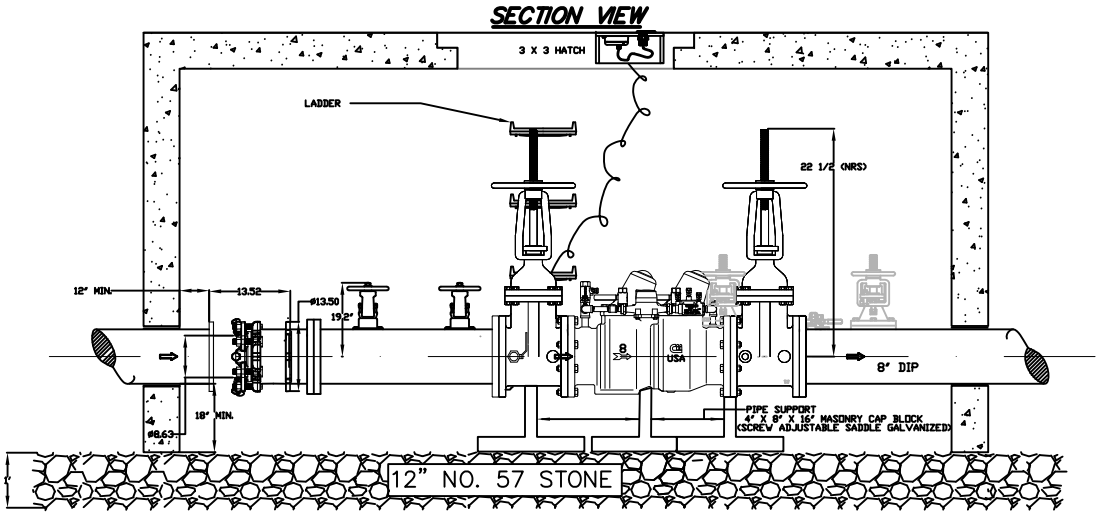

Compound Meters

Size	Normal Operating Range (gpm)	Maximum Continuous Flow (gpm)	Maximum Loss of Head at Max Cont Flow (psi)	Maximum Intermittent Flow (gpm)	Low Flow (gpm)
2"	1/2 - 200	160	8	200	1/8
3"	1/2 - 450	350	8	450	1/8
4"	1 - 1000	700	8	1000	1/2
6"	1 1/2 - 2000	1400	8.5	2000	3/4
6" x 8"	1 1/2 - 2000	2000	10.5	2000	3/4

R-900 MOUNT DETAIL

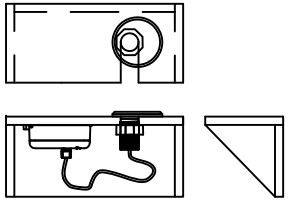

CITY OF FAIRBURN
WATER & SEWER
56 MALONE STREET
FAIRBURN, GEORGIA 30213
770-964-2244

8" DOUBLE CHECK DETECTOR ASSEMBLY WITH 2" & UP COMPOUND METER

*STANDARD OPERATIONAL PROCEDURE

8" DCDA with 3" Compound Meter Reflected in this Detail

W-0004

DESIGNED: J.F.C.	DRAWN:
DATE: 01/15	SCALE: N.T.S.

DATE	REVISIONS	BY

1. All fittings shall be flanged.
2. Vault shall be precast reinforced concrete and all thickness will be a minimum of 6" (top & sides). Inside height of vault shall be a minimum of 6'.
3. Vault shall be precast for non-load bearing application. When vault will be subjected to a live load, customer's engineer shall submit a detailed vault design for City of Fairburn W&S approval, in advance of construction.
4. Vault top shall be reinforced concrete with a minimum 36" x 36" access opening offset to one side.
5. Vault bottom is 12" of No. 57 compacted stone.
6. Vault inlet/outlet pipe openings shall be sealed with non-shrink grout or mortar, pipe must not support vault. Back-flow prevention (BFP) assembly must be supported in at least three (3) places (support details attached).
7. All minimum clearances shown shall be maintained.
8. All pipe and fittings are to be of ductile iron.
9. Hatch cover to be approved in advance by City of Fairburn Water & Sewerage Authority
10. Access ladder is to be doweled to vault wall and centered at the access opening.
11. Vault shall be installed on private property with right of entry.
12. All materials to be furnished by City of Faiburn Water & Sewerage Authority.
13. Q.T. Ball Valves - equipped with stainless steel handles and nuts.

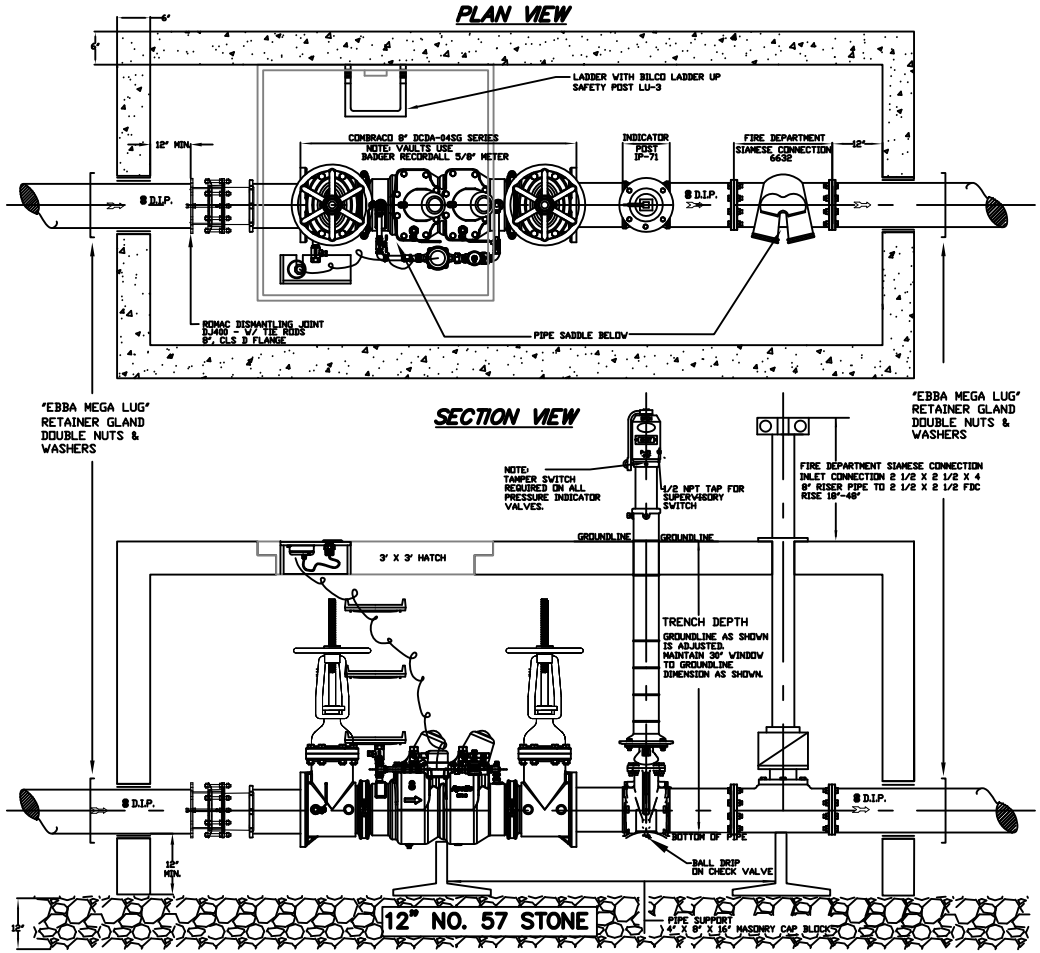

Turbine Meters

Size	Normal Operating Range (gpm)	Maximum Continuous Flow (gpm)	Maximum Loss of Head at Max Cont Flow (psi)	Maximum Intermittent Flow (gpm)
1 1/2"	4 - 160	160	4	200
2"	4 - 200	200	4.5	250
3"	5 - 450	450	5	560
4"	10 - 1200	1200	5.5	1500
6"	20 - 2500	2500	5	3100
8"	35 - 4000	4000	5	5000
10"	50 - 6500	6500	3.5	8000

R-900 MOUNT DETAIL

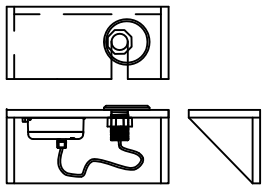

CITY OF FAIRBURN
WATER & SEWER
56 MALONE STREET
FAIRBURN, GEORGIA 30213
770-964-2244

4"-10" DCDA BFP & VAULT P.I.V., FIRE DEPT. CONNECTION & ROMAC DISMANTLING DEVICE

W-0005

DESIGNED: J.C.F.	DRAWN:
DATE: 01/15	SCALE: N.T.S.

BY	REVISIONS	DATE

PROFILE VIEW

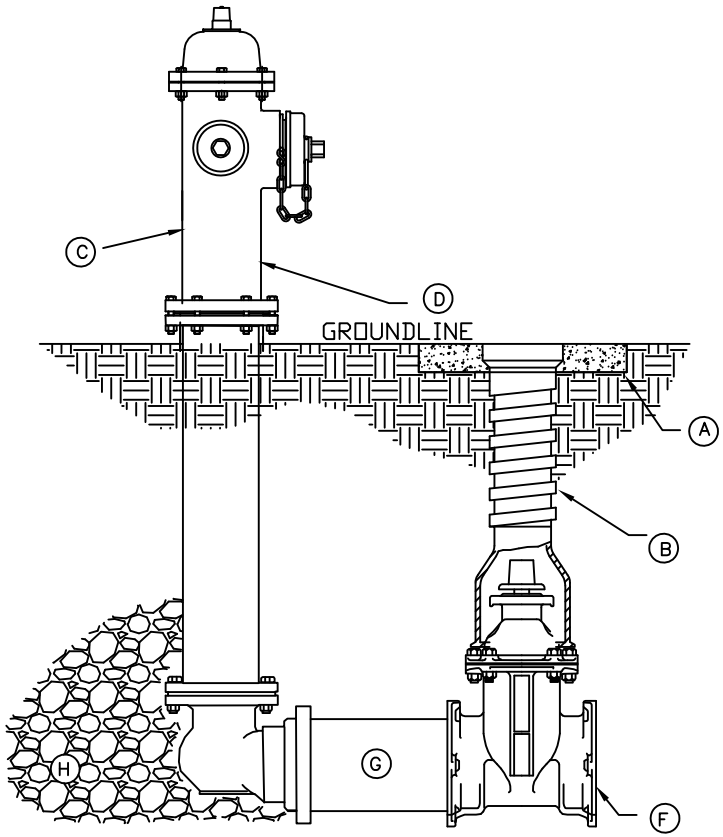

PLAN VIEW

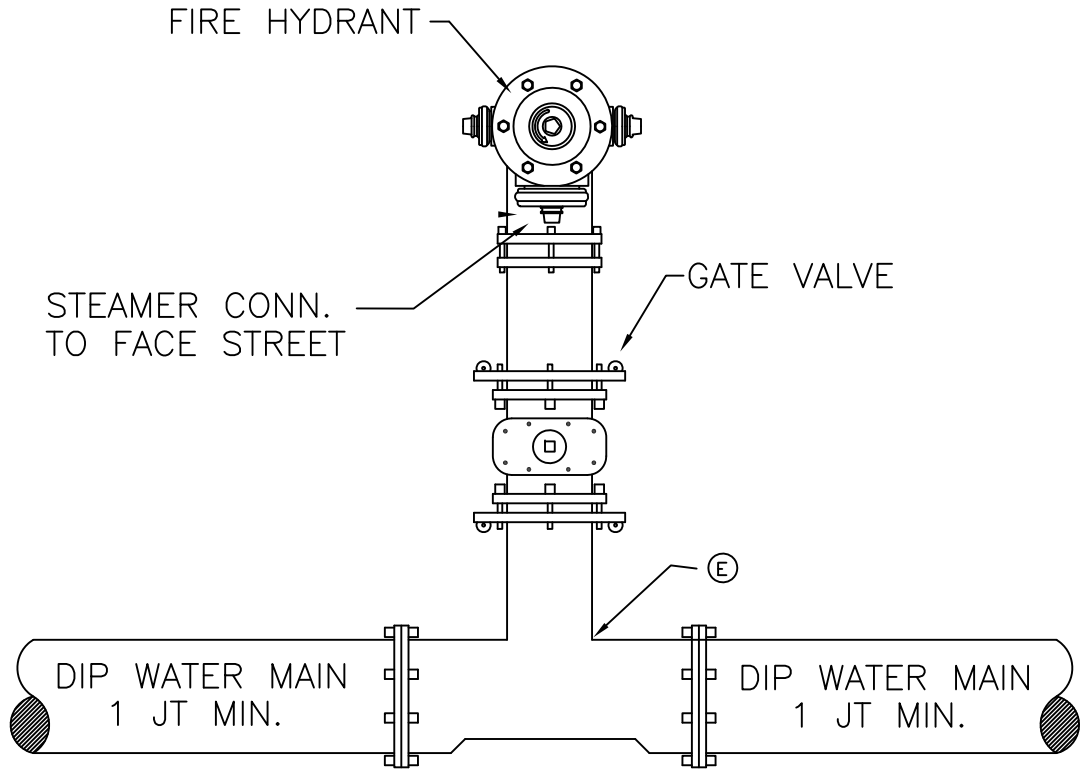

BILL OF MATERIALS	
ITEM	DESCRIPTION
A	CONCRETE COLLAR
B	CAST IRON VALVE BOX
C	M&H 129 OR APPROVED EQUAL
D	FIRE HYDRANT (3 WAY)
E	FIRE HYDRANT TEE
F	6" GATE VALVE
G	ANCHOR COUPLING OR GRADE LOC HYDRANT ADAPTER
H	GRAVEL (14 CUBIC FT. MIN)

GENERAL NOTES:

1. STEAMER NOZZEL TO FACE STREET
2. HYDRANT SET AS CLOSE TO R\W AS PRACTICAL
3. VALVE BOX ADJUSTED TO GRADE
4. CONC. COLLAR AROUND VALVE BOX
5. F.H. ADJUSTED TO GRADE WITH GRADE LOK ANCHOR COUPLING, OR APPROVED EQUAL

CITY OF FAIRBURN
WATER & SEWER
56 MALONE STREET
FAIRBURN, GEORGIA 30213
770-964-2244

TYPICAL FIRE HYDRANT INSTALLATION

W-0006

DESIGNED: J.F.C.	DRAWN:
DATE: 01/15	SCALE: N.T.S.

BY	REVISIONS	DATE

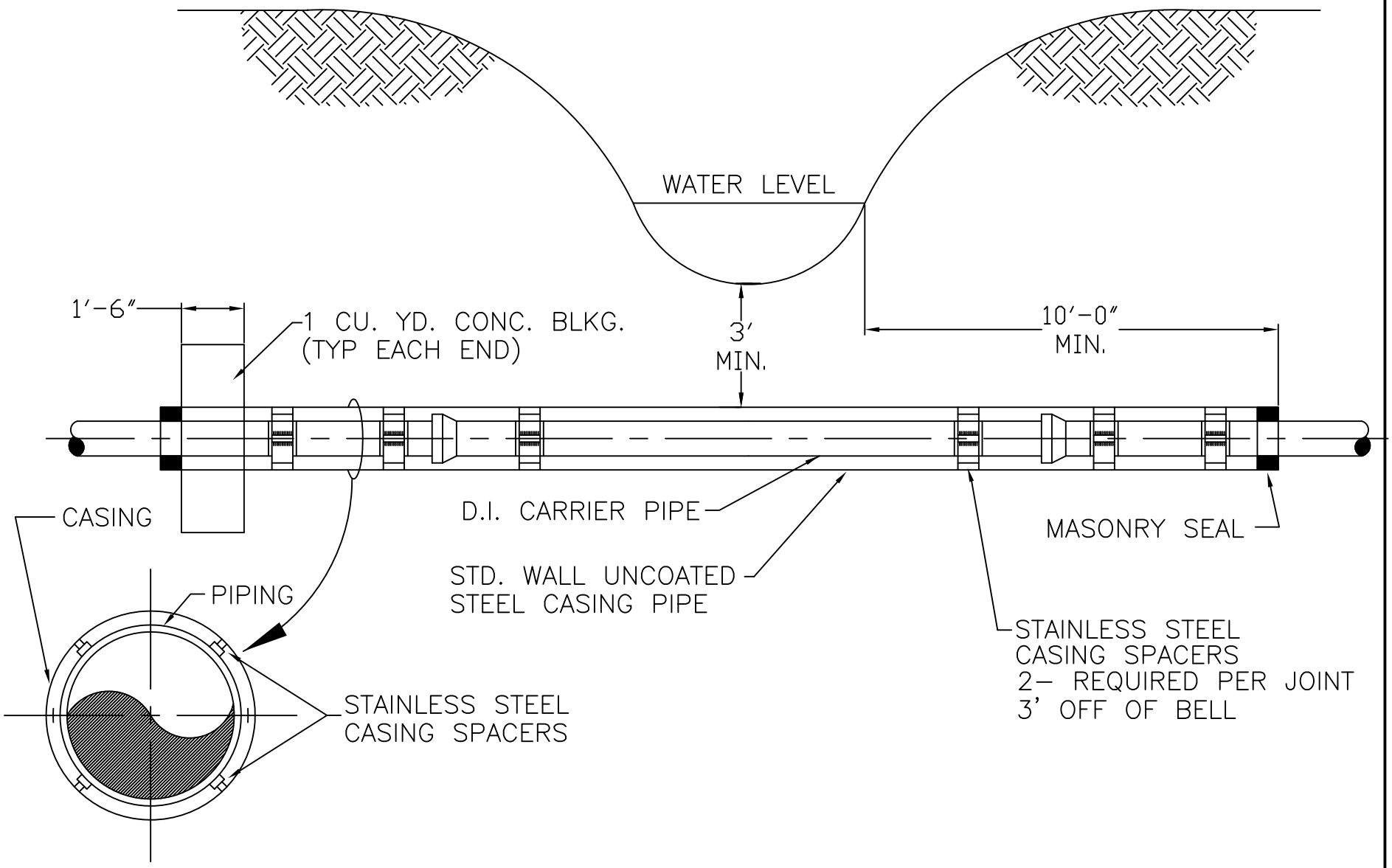

CITY OF FAIRBURN
WATER & SEWER
56 MALONE STREET
FAIRBURN, GEORGIA 30213
770-964-2244

TYPICAL CREEK CROSSING

W-0007

DESIGNED: J.F.C.	DRAWN:
DATE: 01/15	SCALE: N.T.S.

BY	REVISIONS	DATE

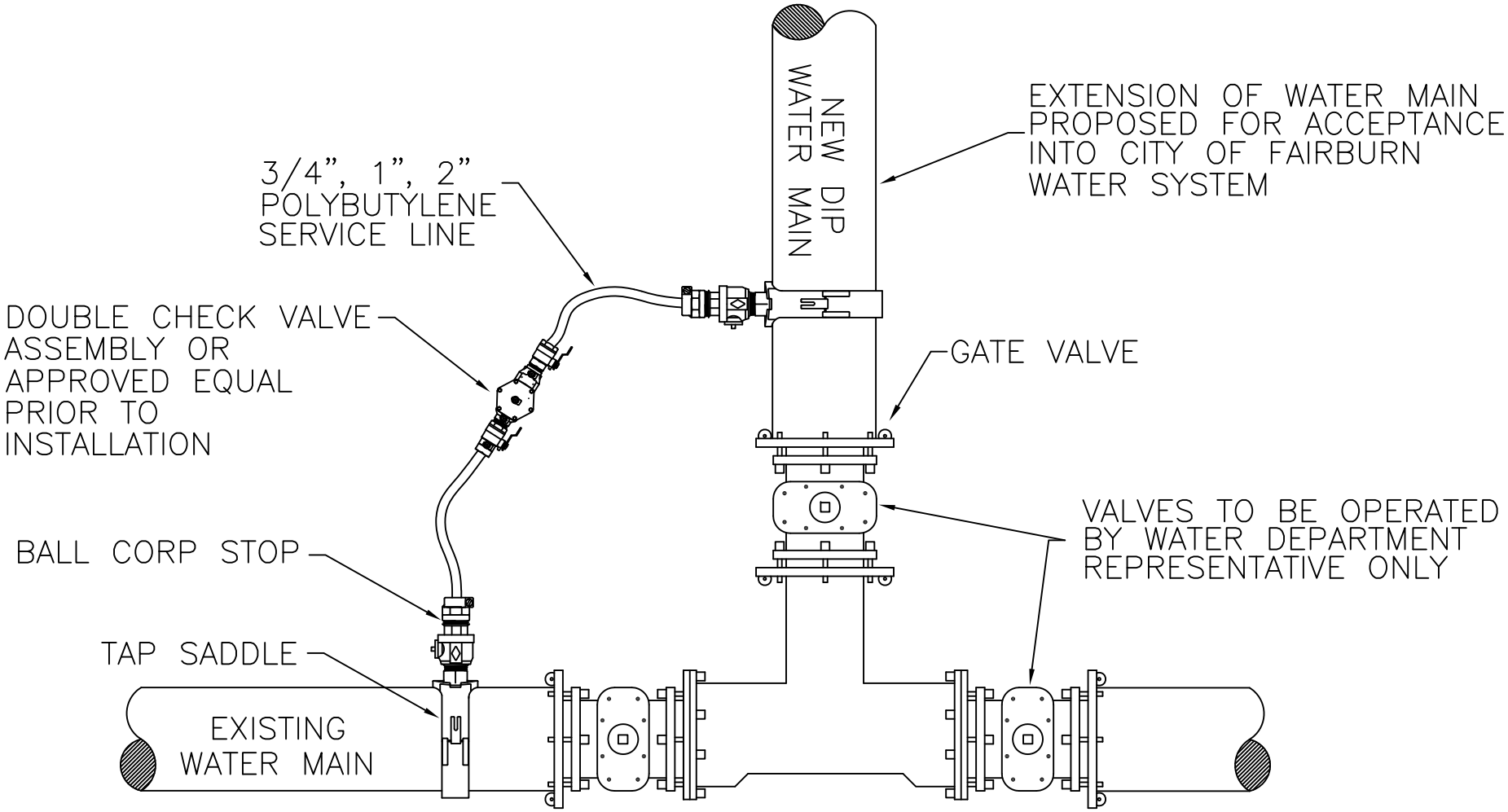

CITY OF FAIRBURN
WATER & SEWER
56 MALONE STREET
FAIRBURN, GEORGIA 30213
770-964-2244

APPROVED METHOD FOR FILLING NEW WATER MAINS

W-0008

DESIGNED: J.F.C.	DRAWN:
DATE: 01/15	SCALE: N.T.S.

BY	REVISIONS	DATE

PIPE SIZE	2"	4"	6"	8"	10"	12"	14"	16"
A*	1	1.5	3	6	9	12	16	20
B*	1	1	2	4	5	8	10	12

* CHART NO.'S ARE SQ. FT. BEARING ON UNDISTURBED MATL.

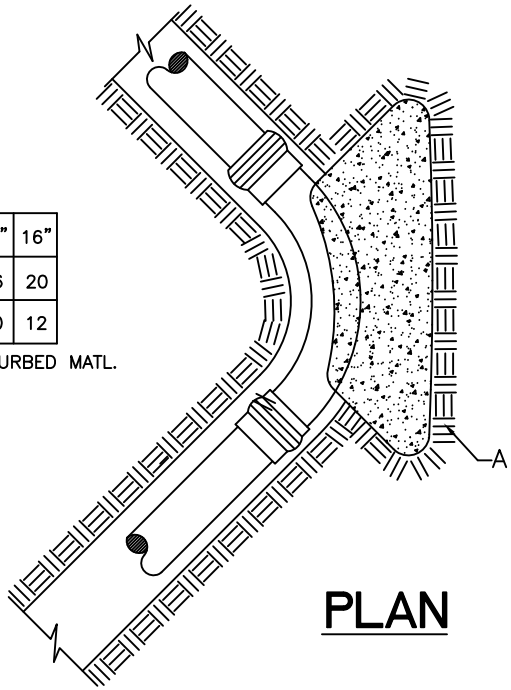

PLAN

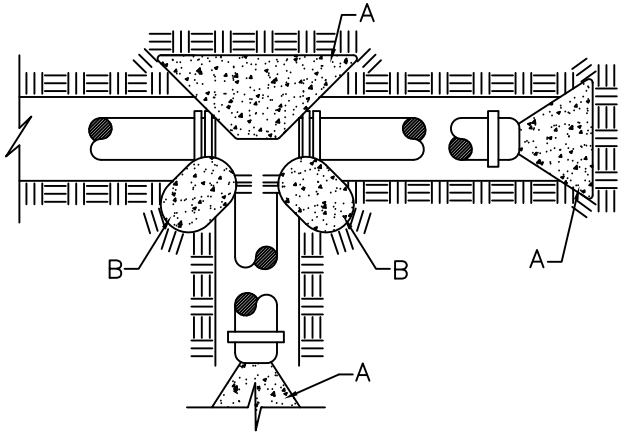

TEE W/ 1 OR 2 PLUGS

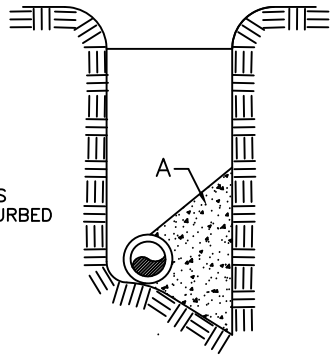

TYP. SECTION

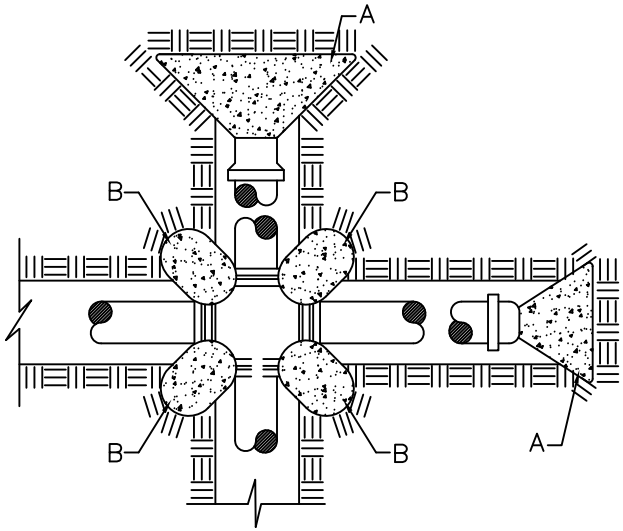

CROSS TEE OR CROSS TEE W/ 1 OR 2 PLUGS

NOTES:

1. POUR THRUST BLOCKS AGAINST UNDISTURBED MATERIAL. WHERE TRENCH WALL HAS BEEN DISTURBED, EXCAVATE LOOSE MATERIAL & EXTEND THRUST BLOCK TO UNDISTURBED MATERIAL.
2. ON BENDS & TEES, EXTEND THRUST BLOCKS FULL LENGTH OF FITTING.
3. PLACE BOARD IN FRONT OF ALL PLUGS BEFORE POURING THRUST BLOCK.
4. CONCRETE SHALL BE 3000 P.S.I.
5. BLOCKING SHALL BE CONSTRUCTED AS PER AWWA STANDARD C600–SECTION 12.3 OR LATEST REVISION.

CITY OF FAIRBURN
WATER & SEWER
56 MALONE STREET
FAIRBURN, GEORGIA 30213
770–964–2244

THRUST BLOCK DETAIL

W–0009

DESIGNED: J.F.C.	DRAWN:
DATE: 01/15	SCALE: N.T.S.

BY	REVISIONS	DATE

1. All fittings shall be flanged.
2. Vault shall be precast reinforced concrete and all thickness will be a minimum of 6" (top & sides). Inside height of vault shall be a minimum of 6'.
3. Vault shall be precast for non-load bearing application. When vault will be subjected to a live load, customer's engineer shall submit a detailed vault design for City of Fairburn W&S approval, in advance of construction.
4. Vault top shall be reinforced concrete with a minimum 36" x 36" access opening offset to one side.
5. Vault bottom is 12" of No. 57 compacted stone.
6. Vault inlet/outlet pipe openings shall be sealed with non-shrink grout or mortar, pipe must not support vault. Back-flow prevention (BFP) assembly must be supported in at least three (3) places (support details attached).
7. All minimum clearances shown shall be maintained.
8. All pipe and fittings are to be of ductile iron.
9. Hatch cover to be approved in advance by City of Fairburn Water & Sewerage Authority
10. Access ladder is to be doweled to vault wall and centered at the access opening.
11. Vault shall be installed on private property with right of entry.
12. All materials to be furnished by City of Fairburn Water & Sewerage Authority.
13. Q.T. Ball Valves - equipped with stainless steel handles and nuts.

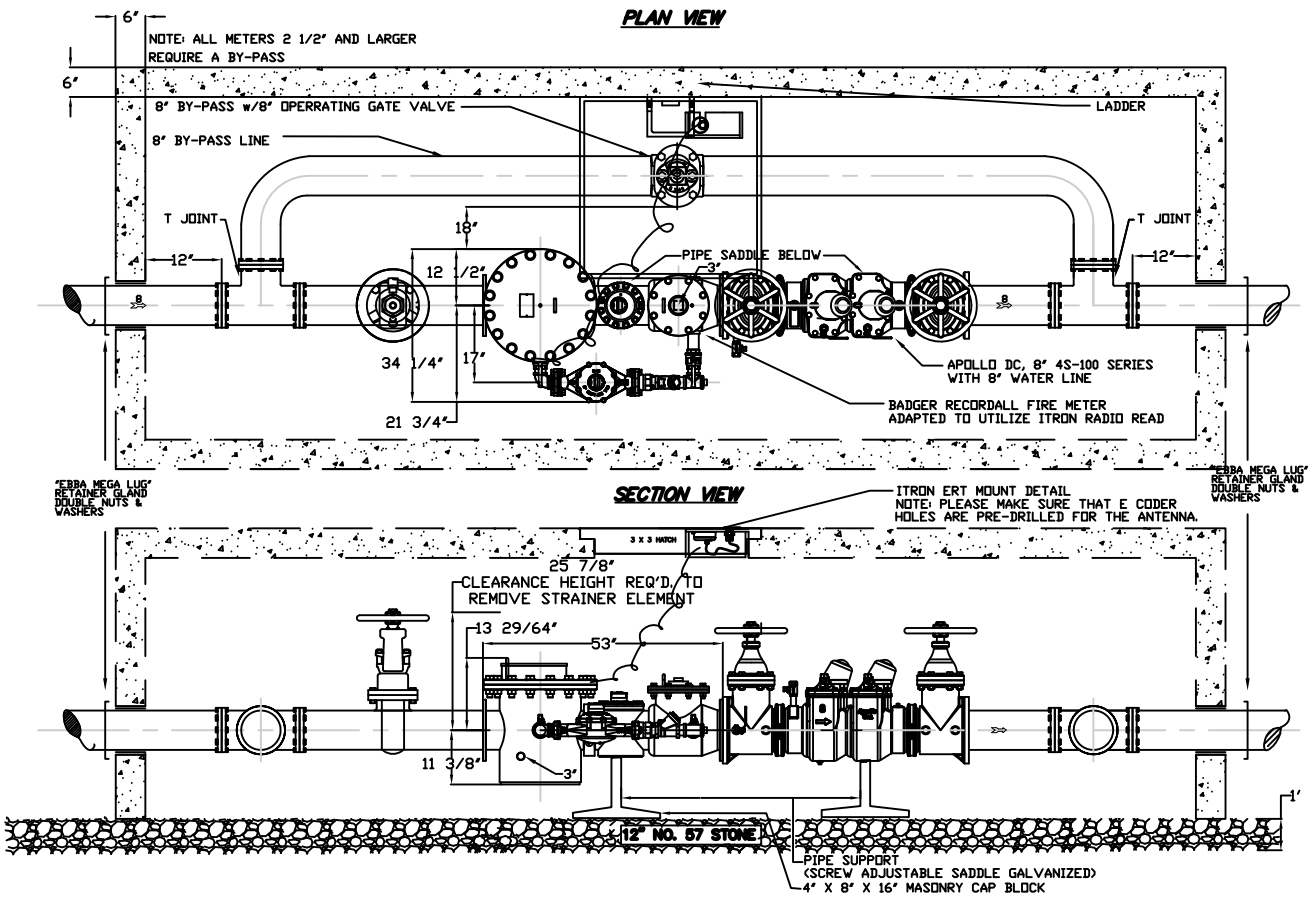

OPERATING CHARACTERISTICS — **HIGH PERFORMANCE PROTECTUS III FIRE SERVICE METER**

SIZE	Normal Operating Range* @100% Accuracy (±1.5%)	AWWA Standart	Low Flow @95% Accuracy	Maximum Intermitten Flow Rate
4"	3/4 to 1200 US gpm 0.171 to 272.55 m³/h	2 to 700 US gpm 0.45 to 159 m³/h	3/8 US gpm 0.09 m³/h	150 US gpm 340.7 m³/h
6"	1 1/2 to 2500 US gpm 0.34 to 567.81 m³/h	4 to 1600 US gpm 0.91 to 363 m³/h	3/8 US gpm 0.17 m³/h	150 US gpm 704.1 m³/h
8"	2 to 4000 US gpm 0.45 to 908.5 m³/h	7 to 2800 US gpm 1.6 to 636 m³/h	1 US gpm 0.23 m³/h	5000 US gpm 1135.6 m³/h
10"	2 to 6500 US gpm 0.45 to 1476.31 m³/h	12 to 4400 US gpm 2.7 to 999 m³/h	1 US gpm 0.23 m³/h	8000 US gpm 1817 m³/h

ITRON ERT MOUNT DETAIL

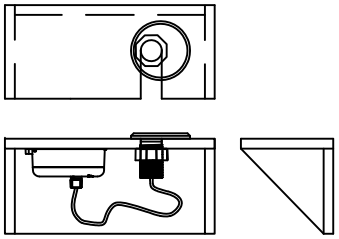

CITY OF FAIRBURN
WATER & SEWER
56 MALONE STREET
FAIRBURN, GEORGIA 30213
770-964-2244

BADGER RECORDALL FIRE (8" SHOWN) SERIES METER WITH BY PASS LINE & DOUBLE CHECK VALVE ASSEMBLY

W-0010

DESIGNED: J.F.C. | DRAWN:
DATE: 01/15 | SCALE: N.T.S.

BY	REVISIONS	DATE

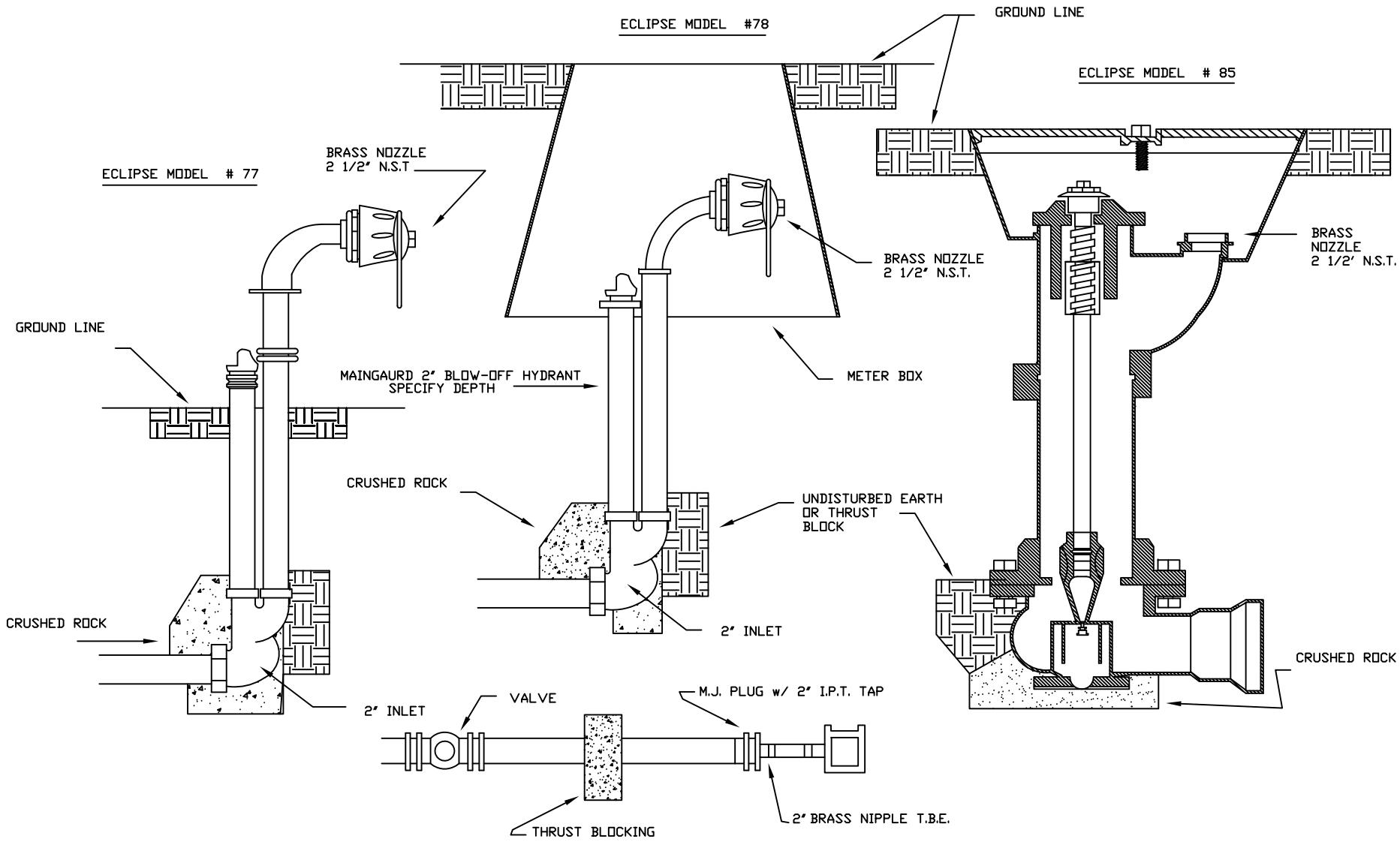

*FLUSHING HYDRANTS ARE FOR TEMPORARY INSTALLATIONS ONLY

CITY OF FAIRBURN
WATER & SEWER
56 MALONE STREET
FAIRBURN, GEORGIA 30213
770-964-2244

APPROVED FLUSHING HYDRANTS*

W-0011

DESIGNED: J.F.C.	DRAWN:
DATE: 01/15	SCALE: N.T.S.

BY	REVISIONS	DATE

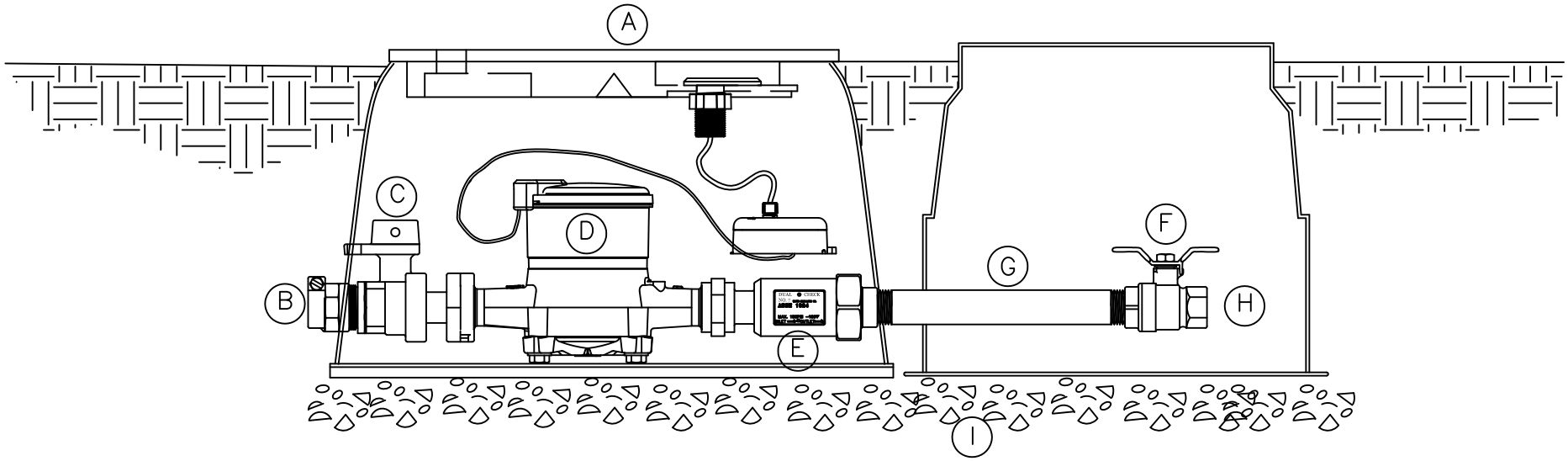

A.) DFW 1219 METER BOX w/ UNDERMOUNT PLASTIC LID (DEVELOPER INSTALLED)
B.) TYPE K COPPER SERVICE LINE CONNECTION (DEVELOPER INSTALLED)
C.) CURB STOP–FORD B43–332W OR APPROVED EQUAL (DEVELOPER INSTALLED)
D.) 3/4" BADGER RECORDALL WATER METER OR APPROVED EQUAL
E.) DUAL CHECK –WILKINS 700 IUFMX34UF OR APPROVED EQUAL
F.) 3/4" WATTS BRASS FBVSSTH BALL VALVE W / STAINLESS STEEL "T" HANDLE OR APPROVED EQUAL
G.) 3/4" X 8" BRASS NIPPLE THREADED BOTH ENDS
H.) CUSTOMER SERVICE CONNECTION
I.) # 57 STONE 4" MIN. DEPTH

Residentail PD Meters

Size	Accuracy Range ± 1.5%
5/8"	1/2 - 20 gpm
3/4"	3/4 - 30 gpm
1"	1 - 50 gpm

CITY OF FAIRBURN
WATER & SEWER
56 MALONE STREET
FAIRBURN, GEORGIA 30213
770–964–2244

TYPICAL INSTALLATION RESIDENTIAL SOIL APPLICATION

W–0012

DESIGNED: J.F.C.
DRAWN:
DATE: 01/15
SCALE: N.T.S.

BY | REVISIONS | DATE

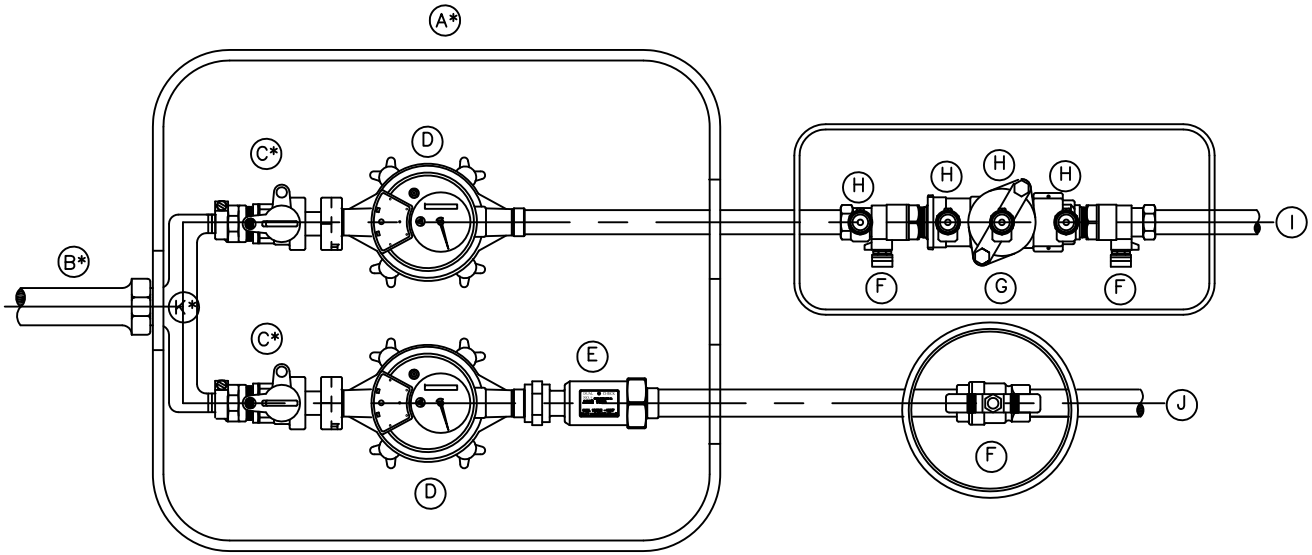

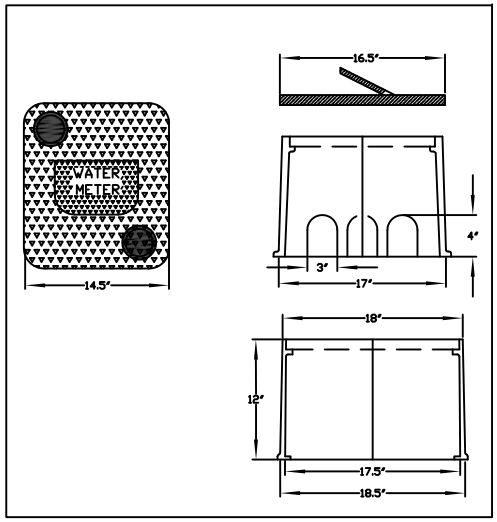

METER BOX DETAIL

A.) MID–STATES PLASTIC MSBC1416–12 METER BOX W/ CAST IRON LID (DEVELOPER INSTALLED)*
B.) TYPE K COPPER SERVICE LINE CONNECTION (DEVELOPER INSTALLED)*
C.) CURB STOP–FORD B43–332W OR APPROVED EQUAL (DEVELOPER INSTALLED)*
D.) 3/4" BADGER RECORDALL WATER METER OR APPROVED EQUAL
E.) DUAL CHECK –WILKINS 700 IUFMX34UF OR APPROVED EQUAL
F.) 3/4" WATTS BRASS FBVSSTH BALL VALVE W / STAINLESS STEEL "T" HANDLE OR APPROVED EQUAL
G.) DOUBLE CHECK VALVE
H.) TEST COCKS
I.) IRRIGATION LINE
J.) DOMESTIC LINE
K.) 1" x 3/4" x 7.5" BRANCH PIECE (DEVELOPER INSTALLED)*

Residentail PD Meters

Size	Accuracy Range ± 1.5%
5/8"	1/2 - 20 gpm
3/4"	3/4 - 30 gpm
1"	1 - 50 gpm

CITY OF FAIRBURN
WATER & SEWER
56 MALONE STREET
FAIRBURN, GEORGIA 30213
770–964–2244

DUAL RESIDENTIAL AND IRRIGATION METER INSTALLATION

W–0012A

DESIGNED: J.F.C. DRAWN:
DATE: 01/15 SCALE: N.T.S.

BY	REVISIONS	DATE

IRRIGATION METER PLAN VIEW

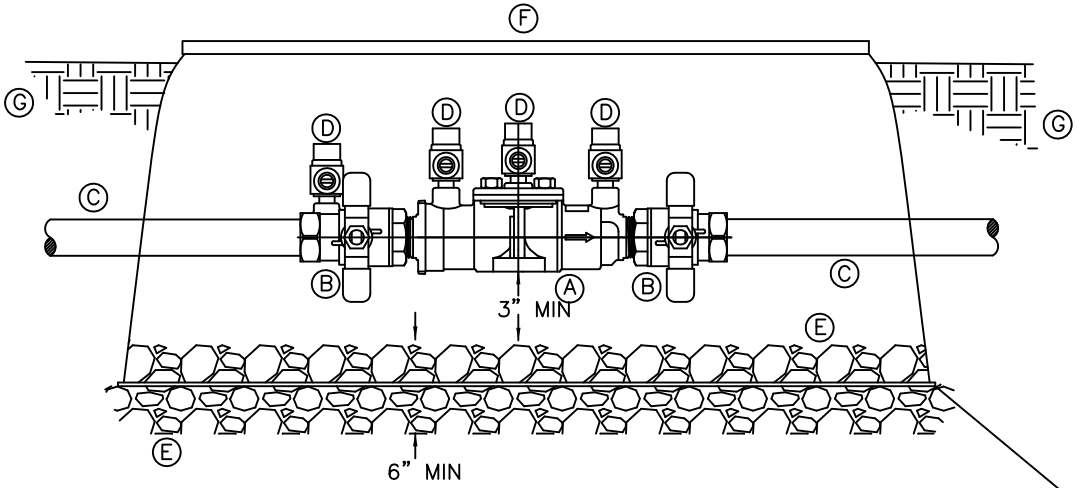

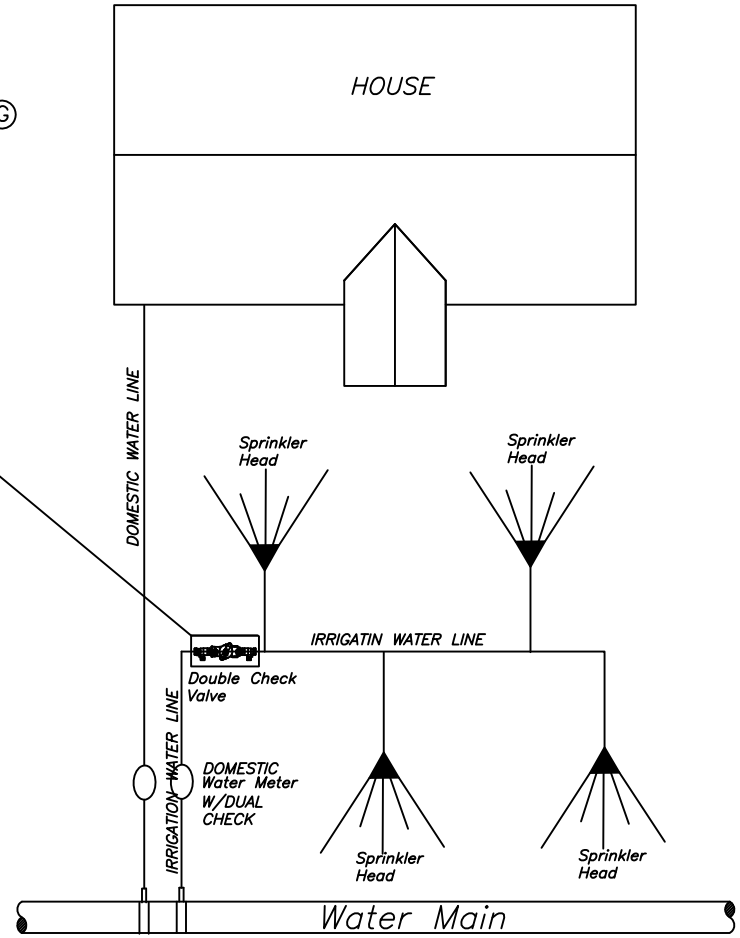

A.) DOUBLE CHECK VALVE
B.) 3/4" WATTS BRASS FBVSSTH BALL VALVE W / STAINLESS STEEL "T" HANDLE OR APPROVED EQUAL
C.) WATER LINE
D.) TEST COCKS
E.) #57 STONE 6" MIN. DEPTH
F.) 12" EXTENSION RECTANGLE VALVE BOX 3/4" UP TO 1" (2" NEEDS 80" BOX)
G.) COMPACTED EARTH

CITY OF FAIRBURN
WATER & SEWER
56 MALONE STREET
FAIRBURN, GEORGIA 30213
770-964-2244

RESIDENTIAL IRRIGATION METER INSTALLATION

W-0012B

DESIGNED: J.F.C.	DRAWN:
DATE: 01/15	SCALE: N.T.S.

BY	REVISIONS	DATE

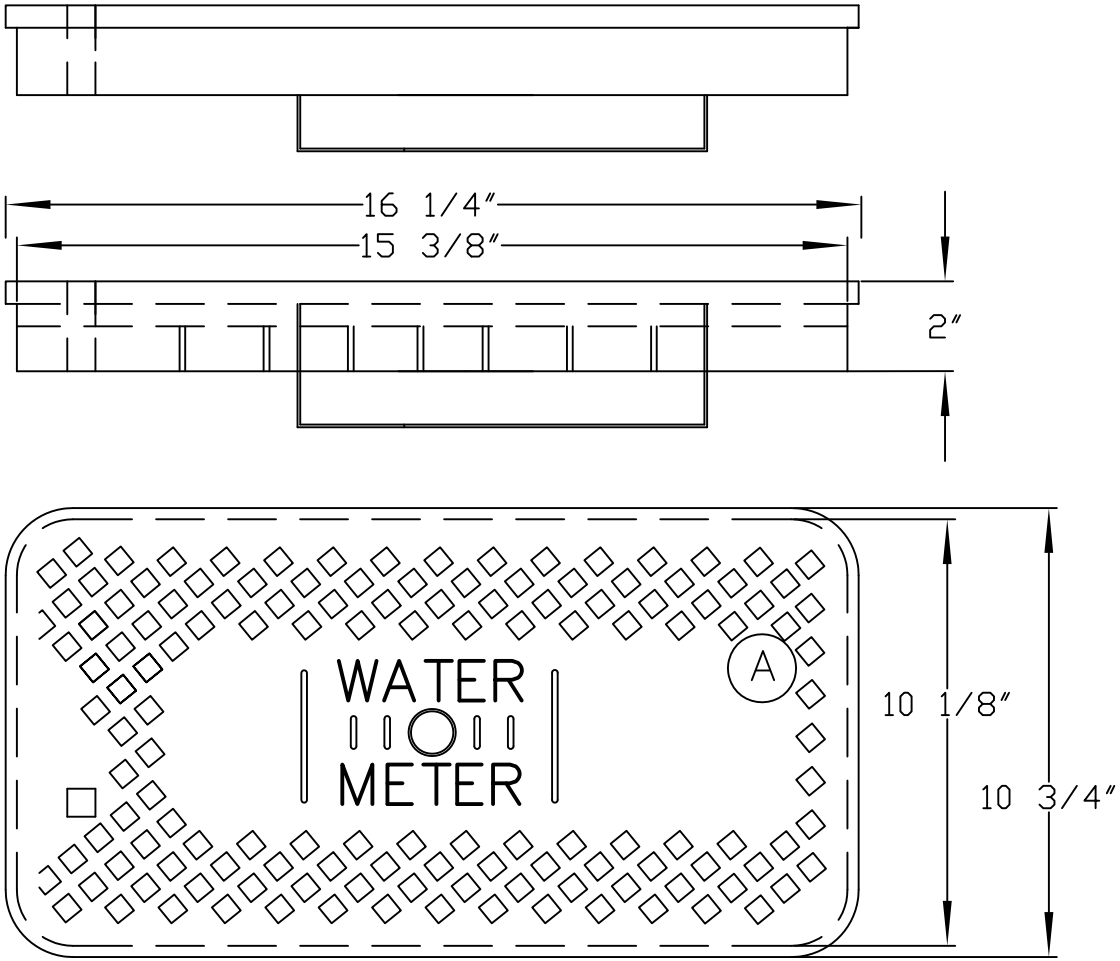

NOTE: PLASTIC PENTEK
T-TOP LID (NO LOCKS)

A. DROP-IN LID (W/SNAP LOCKS)
B. 12" STANDARD BOX

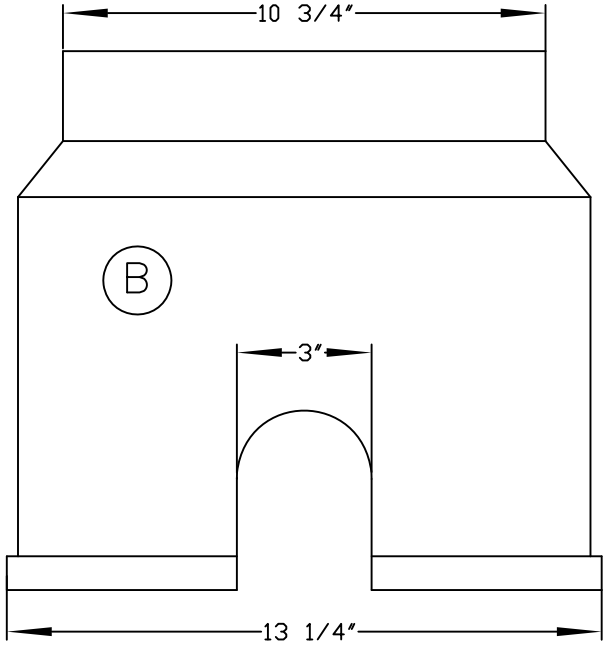

CITY OF FAIRBURN
WATER & SEWER
56 MALONE STREET
FAIRBURN, GEORGIA 30213
770-964-2244

STANDARD 5/8" OR 3/4" METER BOX AND LID

W-0013A

DESIGNED: J.F.C.	DRAWN:
DATE: 01/15	SCALE: N.T.S.

BY	REVISIONS	DATE

NOTE: PLASTIC PENTEK
T-TOP LID
10" ROUND BOX

SECTION VIEW

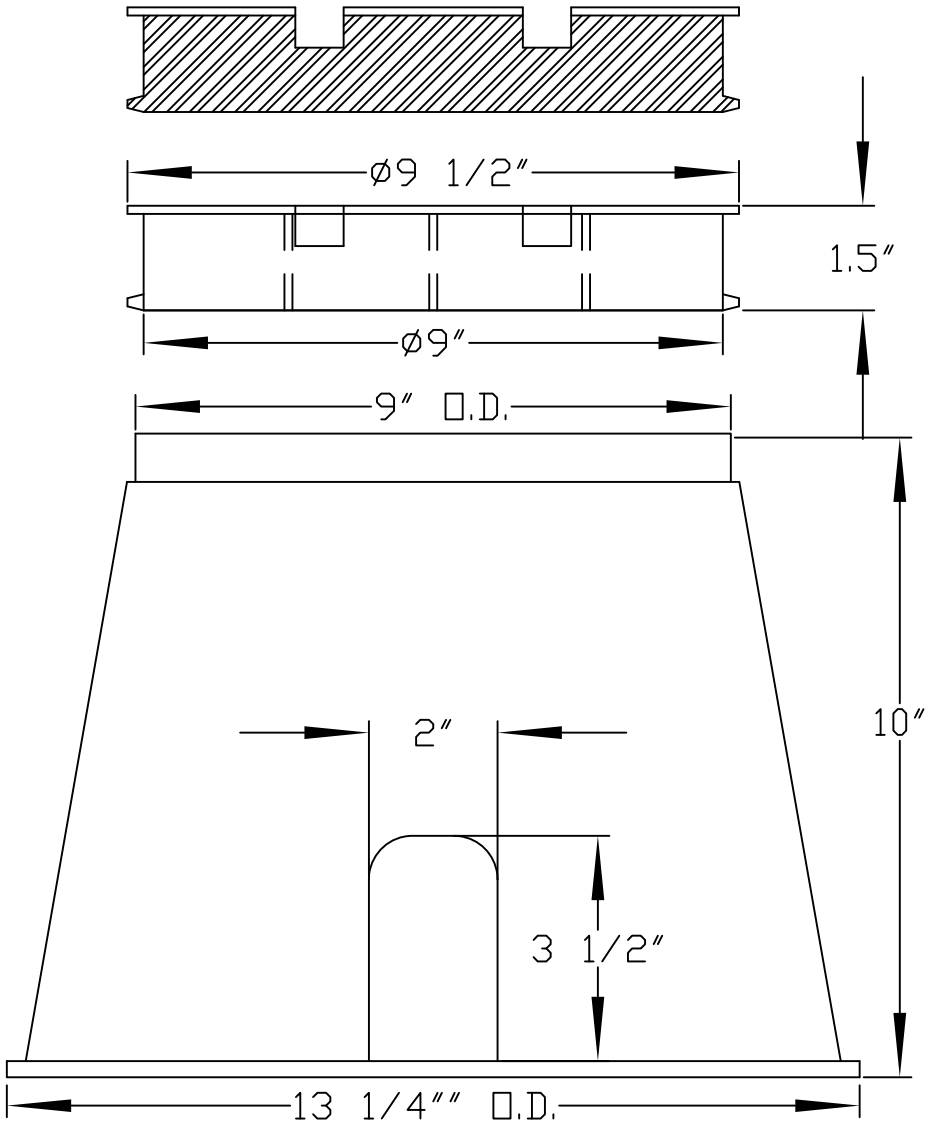

PLAN VIEW

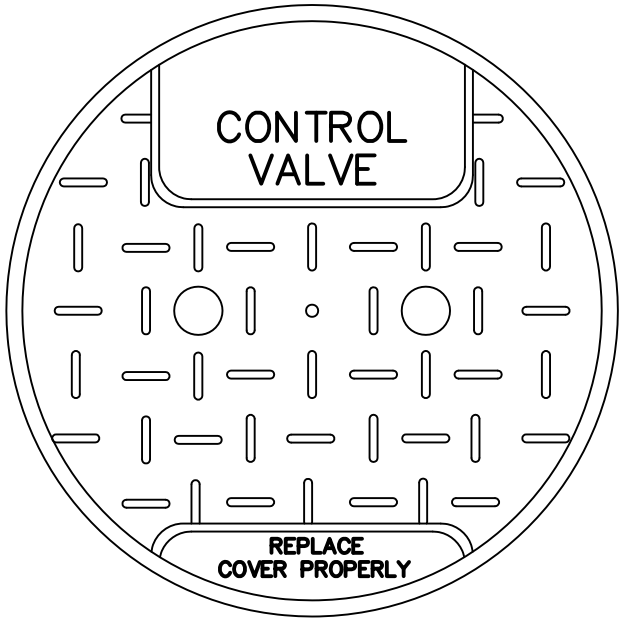

CITY OF FAIRBURN
WATER & SEWER
56 MALONE STREET
FAIRBURN, GEORGIA 30213
770-964-2244

CUSTOMER CUT-OFF
10" ROUND IRRIGATION
TURF BOX LID

W-0013B

DESIGNED: J.F.C.	DRAWN:
DATE: 01/15	SCALE: N.T.S.

BY	REVISIONS	DATE

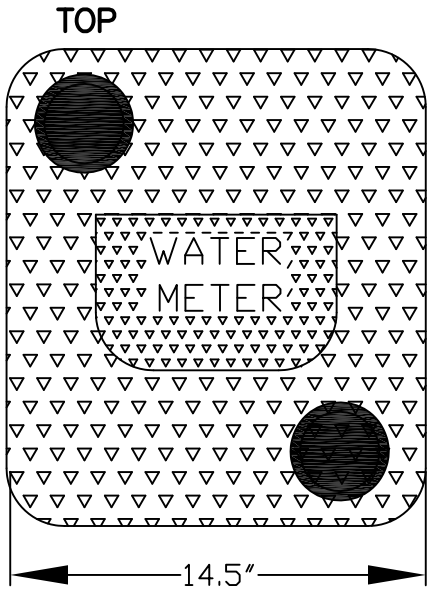

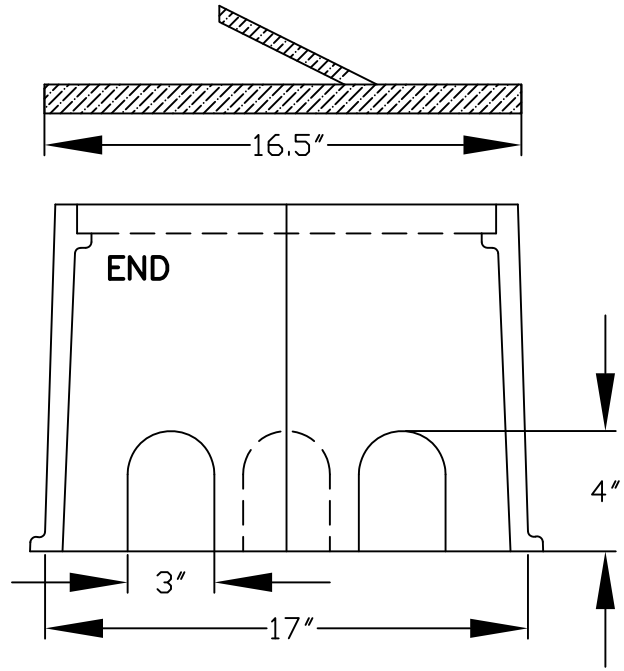

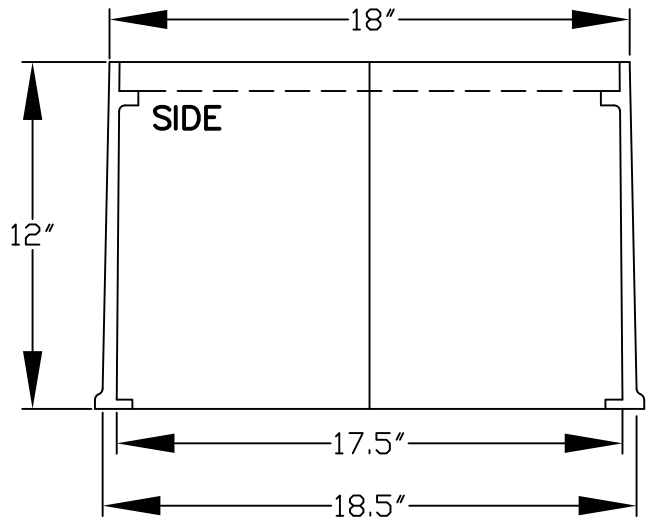

A.) MID–STATES PLASTIC MSBC1416–12 METER BOX
W/ CAST IRON LID (DEVELOPER INSTALLED)*

CITY OF FAIRBURN
WATER & SEWER
56 MALONE STREET
FAIRBURN, GEORGIA 30213
770–964–2244

DUAL RESIDENTIAL AND IRRIGATION METER BOX

W–0013C

DESIGNED: J.F.C.	DRAWN:
DATE: 01/15	SCALE: N.T.S.

BY	REVISIONS	DATE

A. INJECTION MOLDED OF STRUCTURAL FOAM POLYOLEFIN MATERIAL

B. BODY: 17" x 30" , TAPERED AND AND WALL THICKNESS OF.320"

C. BOX BODY SHALL HAVE STRUCTURAL SUPPORT RIBS ON THE UNDERSIDE OF THE SEAT, MINIMUM THICKNESS OF .250"

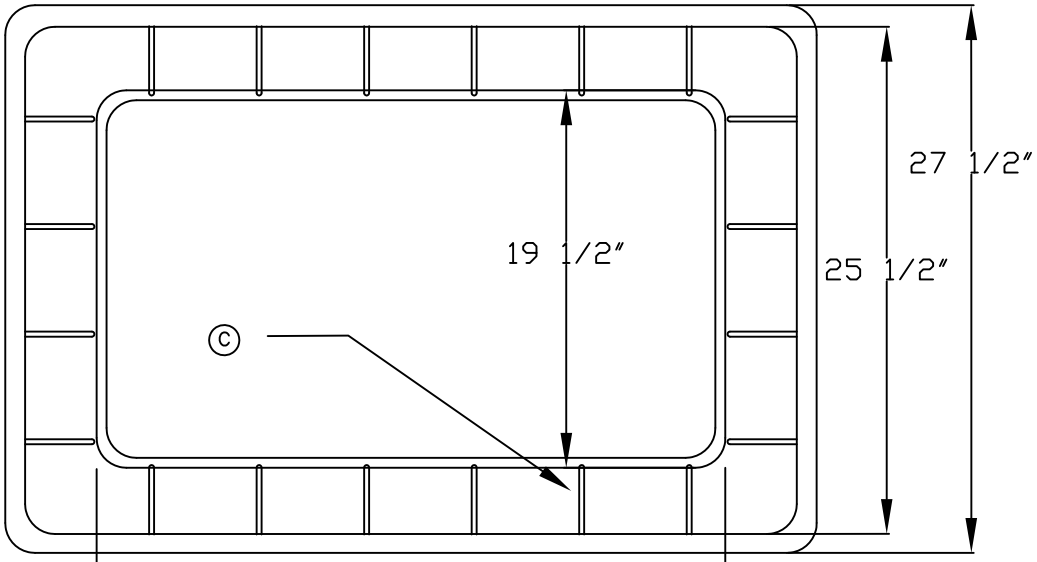

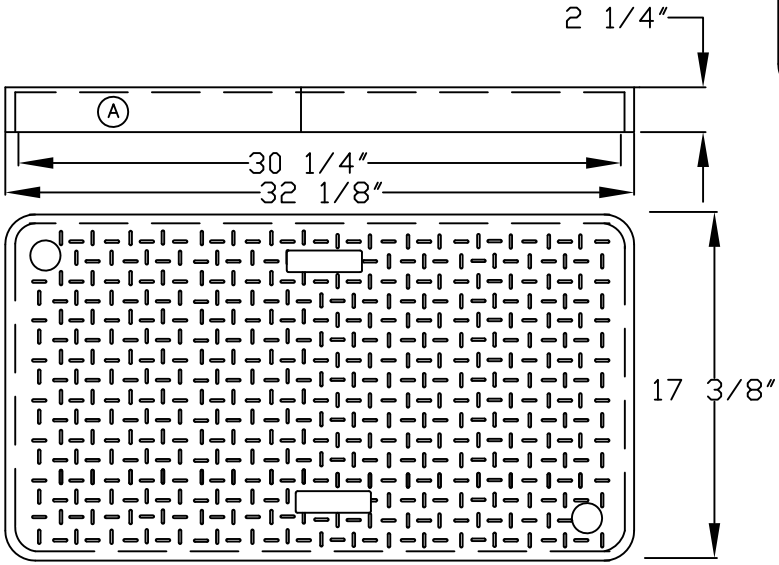

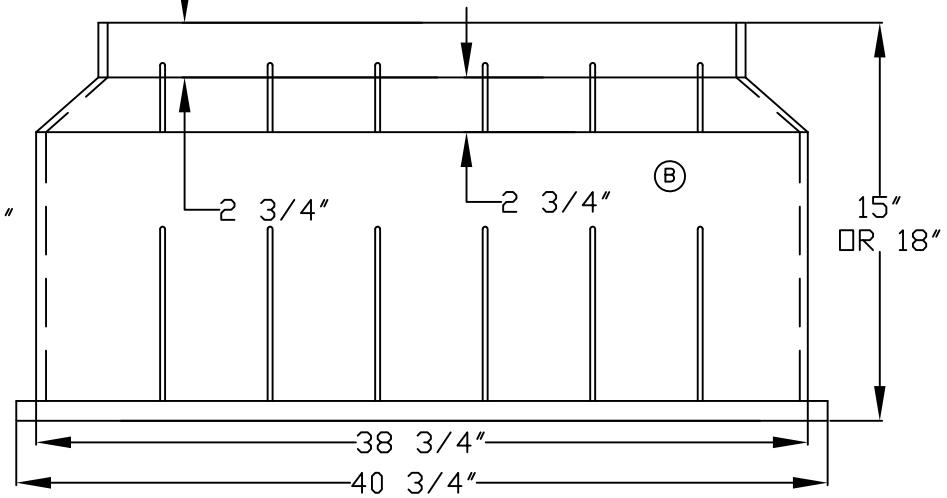

CITY OF FAIRBURN WATER & SEWER 56 MALONE STREET FAIRBURN, GEORGIA 30213 770-964-2244	STANDARD 1" POSITIVE DISPLACEMENT WITH DOUBLE CHECK METER BOX AND LID	W-0013D			BY
		DESIGNED: J.F.C.	DRAWN:		REVISIONS
		DATE: 01/15	SCALE: N.T.S.		DATE

TOP VIEW

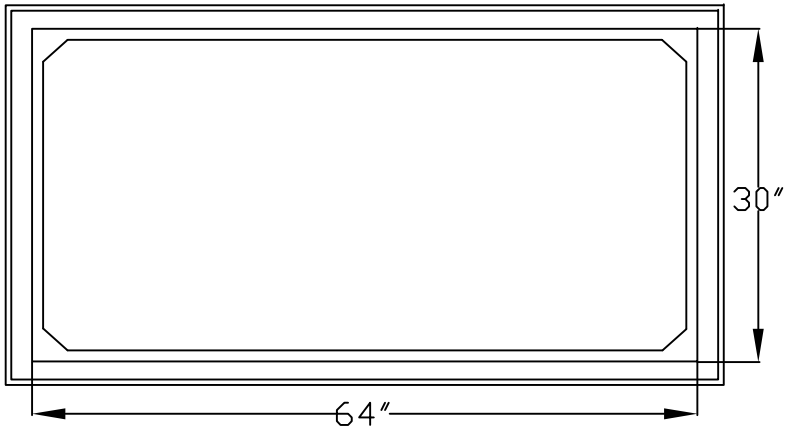

TWO PIECE COVER

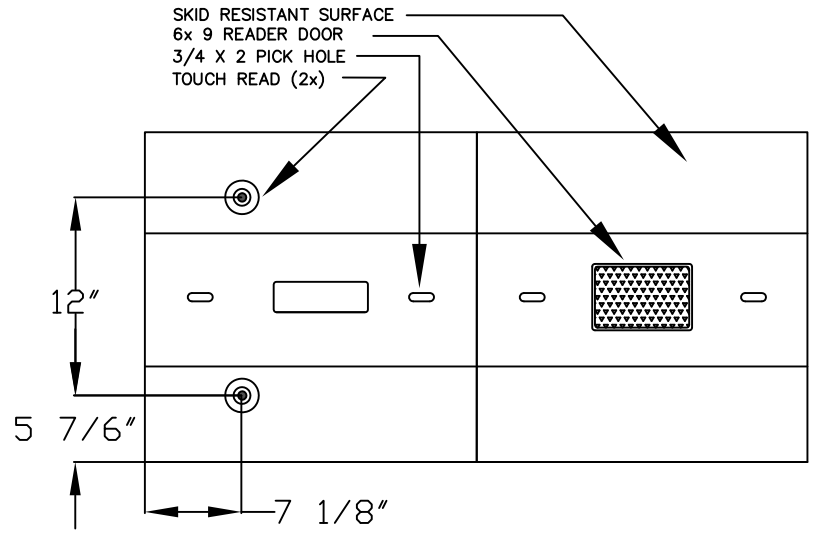

SECTION VIEW

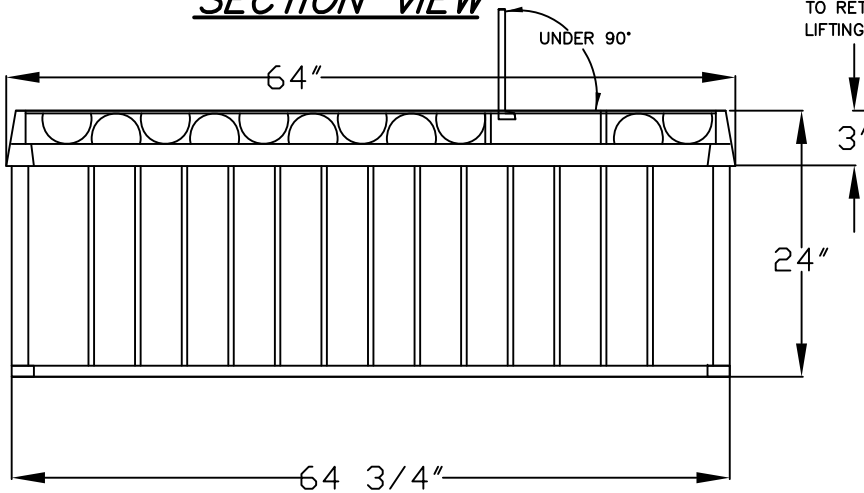

END VIEW

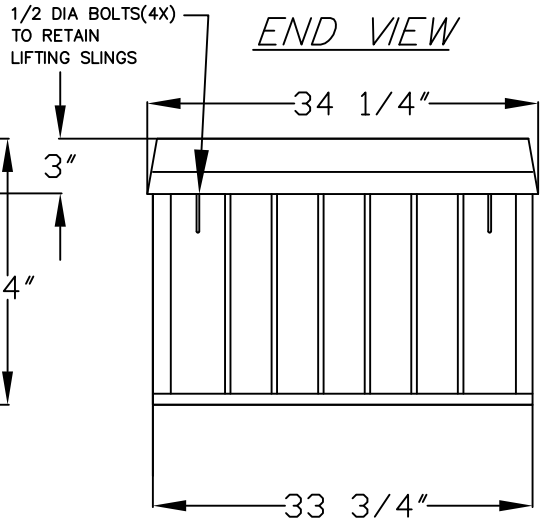

COMPONENTS	
COVER	WC00–3060–23
BOX	WB00–3060–24

- MATERIAL: FIBERGLASS REINFORCED POLYMER CONCRETE & FIBERGLASS REINFORCED POLYMER.
- COLOR CONCRETE GRAY
- LOAD RATING: AB [ASJ14 C857]
- LOGO: CITY OF FAIRBURN

CITY OF FAIRBURN
WATER & SEWER
56 MALONE STREET
FAIRBURN, GEORGIA 30213
770–964–2244

STANDARD 2" COMPOUND METER BOX AND LID

W–0013E

DESIGNED: J.F.C. | DRAWN:
DATE: 01/15 | SCALE: N.T.S.

BY	REVISIONS	DATE

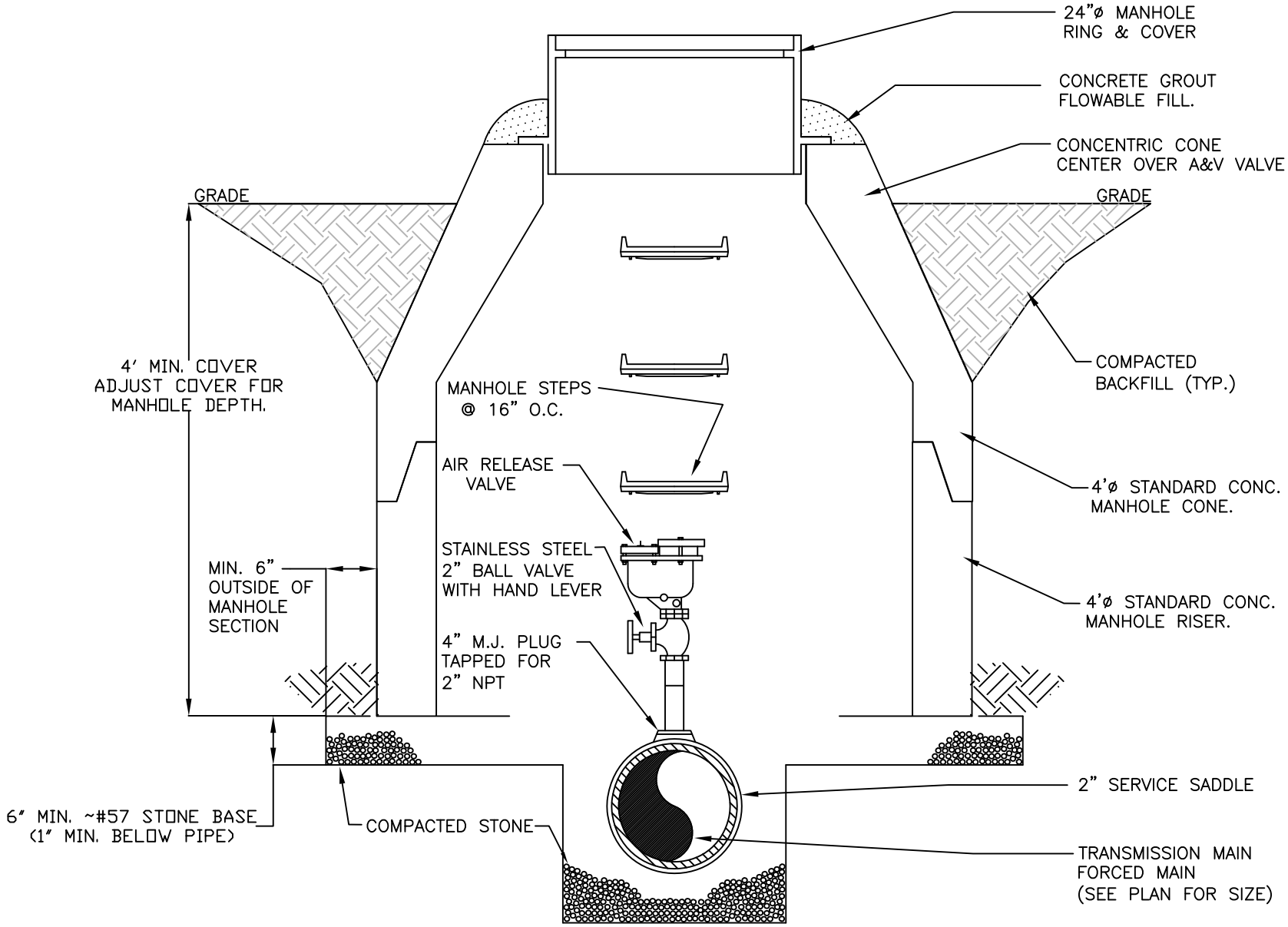

CITY OF FAIRBURN
WATER & SEWER
56 MALONE STREET
FAIRBURN, GEORGIA 30213
770-964-2244

AIR RELEASE VALVE DETAIL

W-0014

DESIGNED: J.F.C.	DRAWN:
DATE: 01/15	SCALE: N.T.S.

BY	REVISIONS	DATE

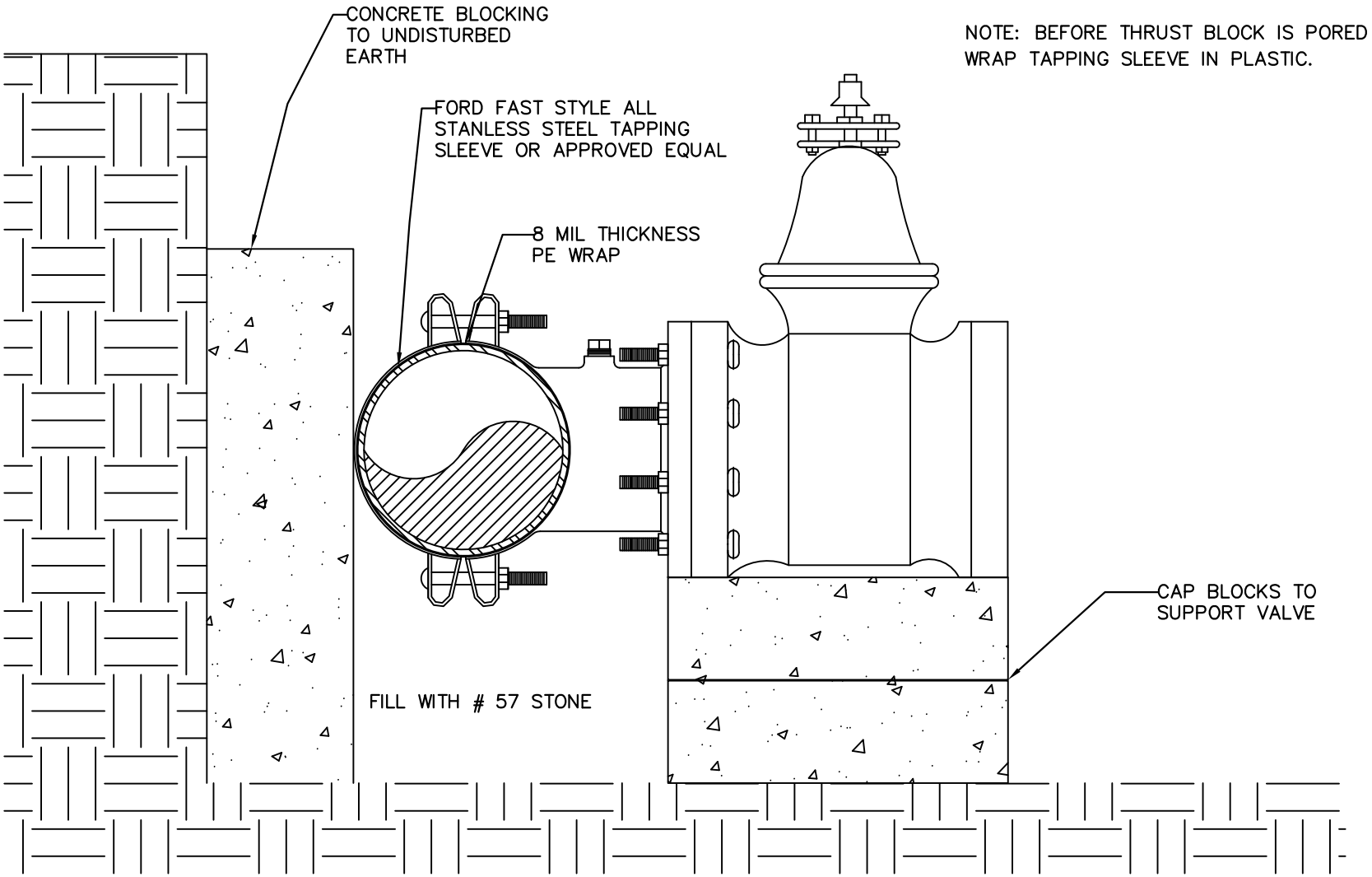

CITY OF FAIRBURN
WATER & SEWER
56 MALONE STREET
FAIRBURN, GEORGIA 30213
770-964-2244

WATER LINE VALVE TAPPING SLEEVE

W-0015

DESIGNED: J.F.C.	DRAWN:
DATE: 01/15	SCALE: N.T.S.

BY	REVISIONS	DATE

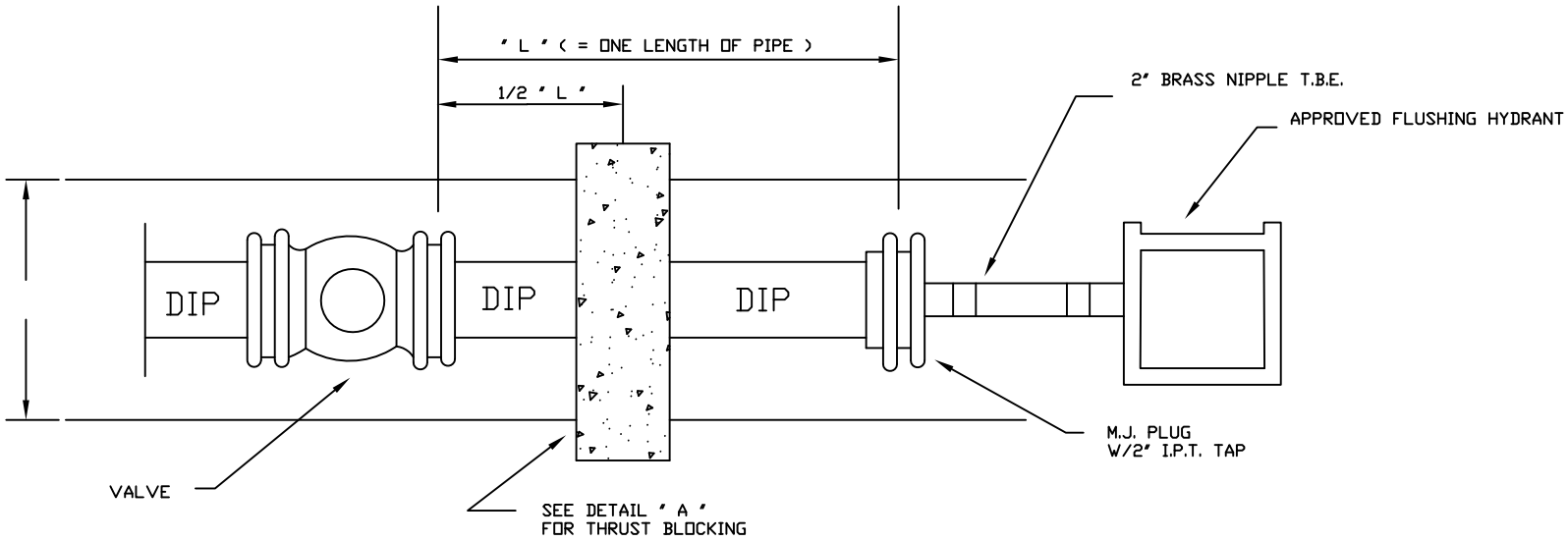

DIA.	" A "	" B "
20"	2' - 0"	2' - 0"
16"	1' - 6"	1' - 0"
4"	1' - 6"	1' - 6"
12"	1' - 6"	1' - 0"
10"	1' - 0"	1' - 0"
8"	1' - 0"	1' - 0"
6"	1' - 0"	1' - 0"
4"	1' - 0"	1' - 0"

NOTE: THE ABOVE FIGURES ARE BASED ON SOIL BEARING CAPACITY OF 2000#/S.F.

DETAIL A

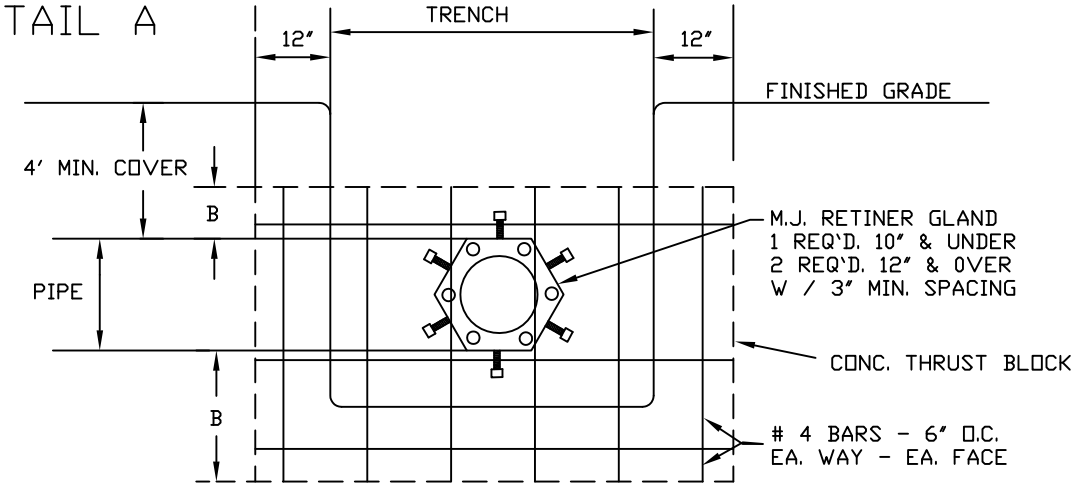

CITY OF FAIRBURN
WATER & SEWER
56 MALONE STREET
FAIRBURN, GEORGIA 30213
770-964-2244

TERMINAL END DETAIL

W-0016

DESIGNED: J.F.C.	DRAWN:
DATE: 01/15	SCALE: N.T.S.

BY	REVISIONS	DATE

(1) Vault shall be precasted reinforced concrete.

(2) Vault bottom 12" of No. 57 compacted stone.

(3) Vault top shall be reinforced concrete with 36" x 36" access opening, offset to ladder side.

(4) Access ladder doweled to wall and centered at access opening.

(5) Hatch cover: Bilco-aluminum single model # j-4al; or equal.

(6) Vault inlet/outlet pipe openings to be sealed with grout or mortar, pipe must not support vault.

(7) BFP assembly to be supported at three (3) points with pipe stand.

(8) Thrust blocking all joints from tap to customers side of the vault shall be restrained as directed by City of Fairburn W&S Department

(9) Thrust tie rods shall be bitumiastic coated.

(10) All pipe and pipe fittings shall be ductile iron.

(11) Vault to be installed as close as practical to the property line of the premise and a RIGHT of ENTRY form legally executed and forwarded to the BFP Coordinator.

(12) The Customer/Owner shall furnish and have installed all materials.

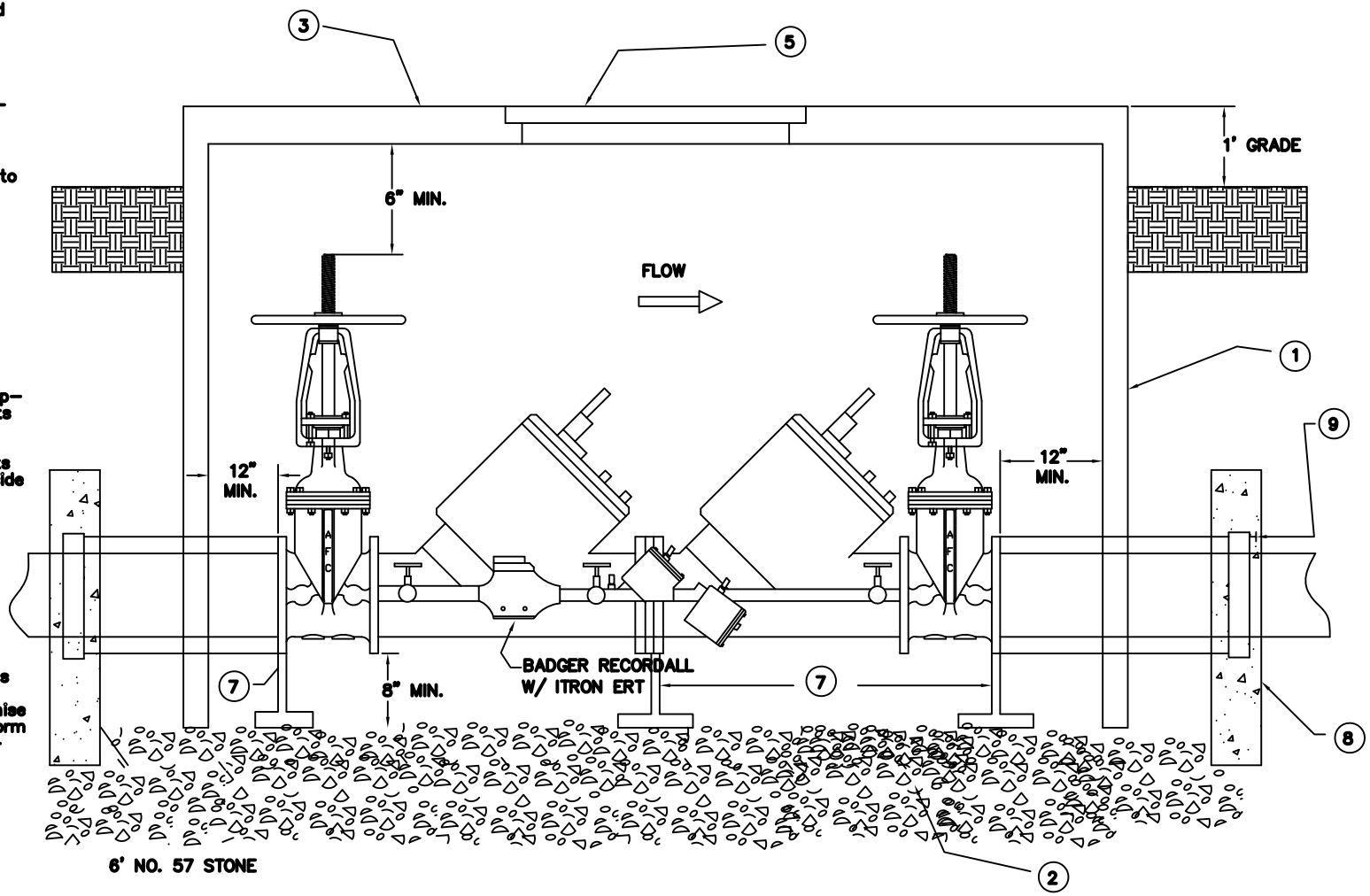

CITY OF FAIRBURN
WATER & SEWER
56 MALONE STREET
FAIRBURN, GEORGIA 30213
770-964-2244

ELEVATION VIEW FOR VAULT INSTALLATIONS

W-0017

DESIGNED: J.F.C.	DRAWN:
DATE: 01/15	SCALE: N.T.S.

BY	REVISIONS	DATE

NOTE: DUCTILE IRON TO EXTEND BEYOND ALL VALVES & FITTINGS (MIN 1 JOINT)

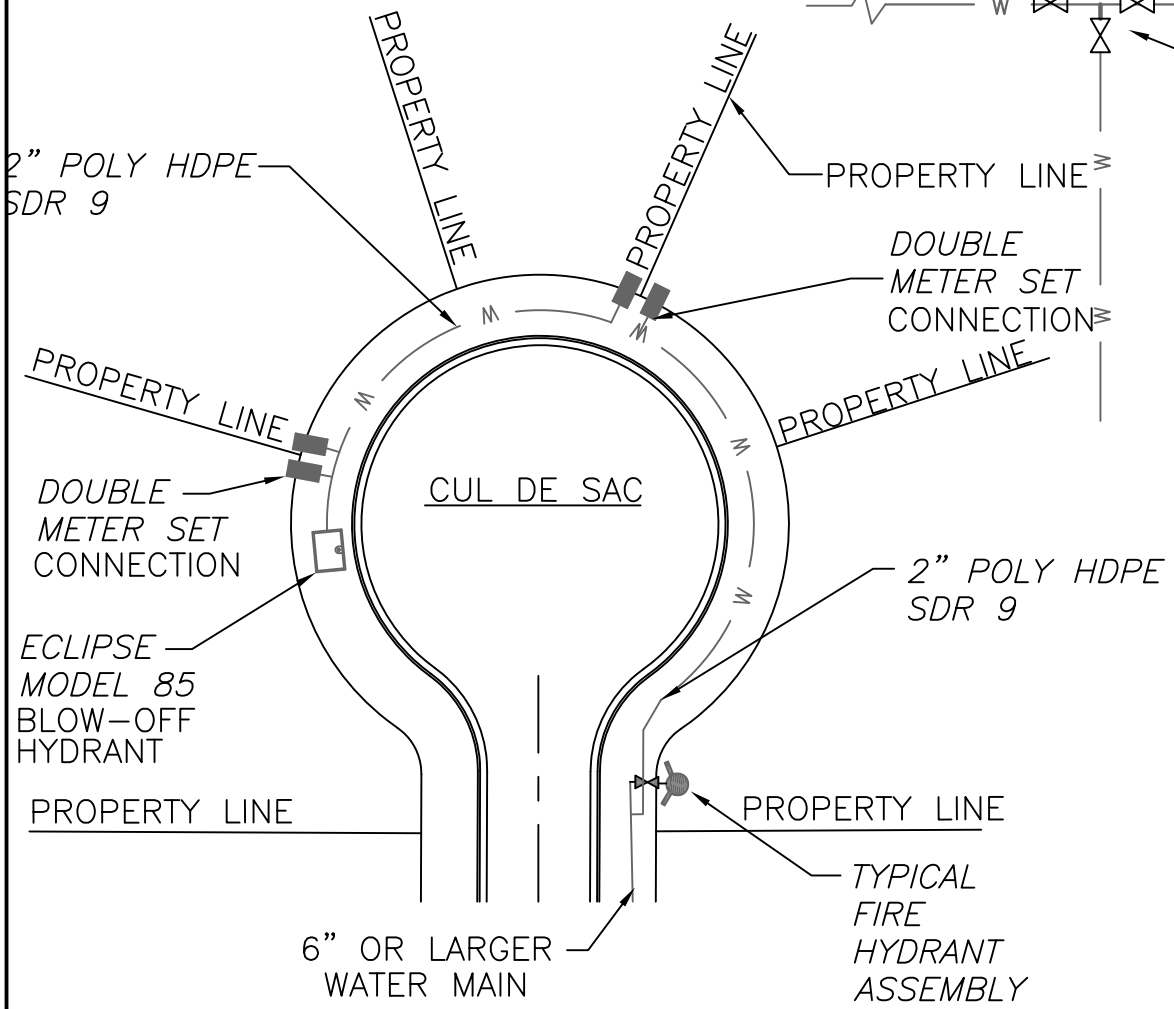

TYPICAL STREET INTERSECTION

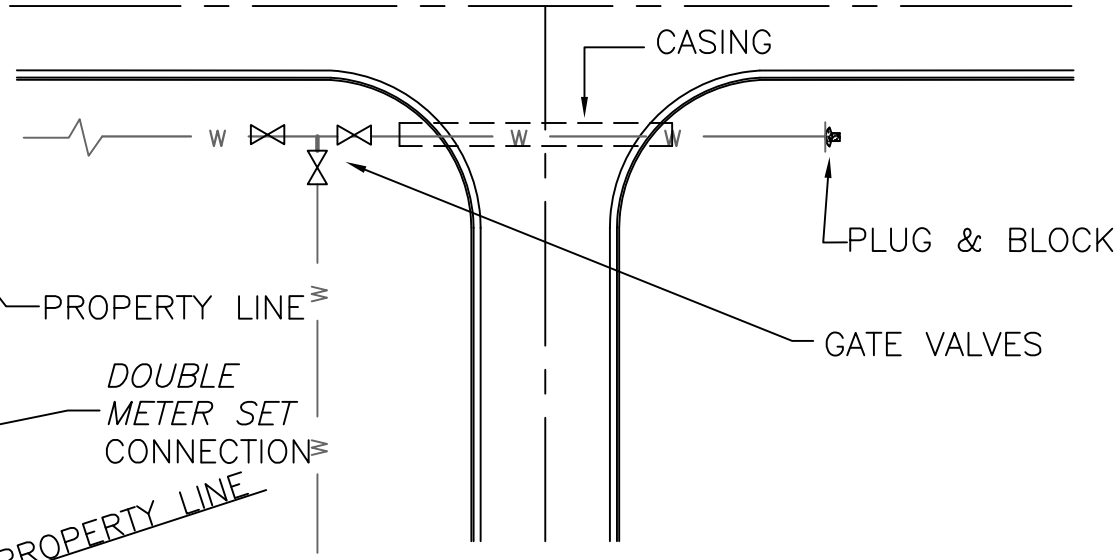

STANDARD VALVE LOCATIONS @ CROSS TYPE INTERSECTION

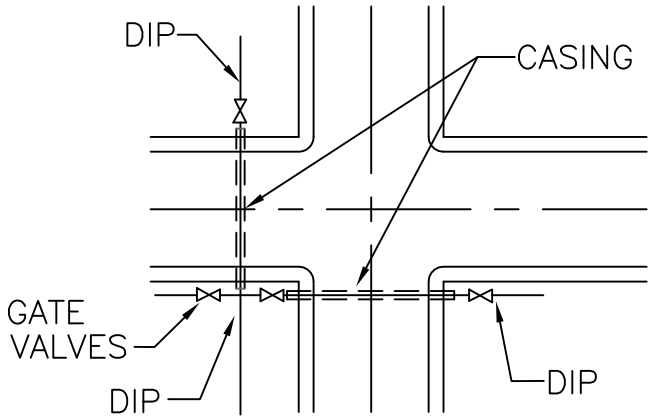

CITY OF FAIRBURN
WATER & SEWER
56 MALONE STREET
FAIRBURN, GEORGIA 30213
770-964-2244

WATERLINE VALVE INSTALLATION

W-0018

DESIGNED: J.F.C.	DRAWN:
DATE: 01/15	SCALE: N.T.S.

BY	REVISIONS	DATE

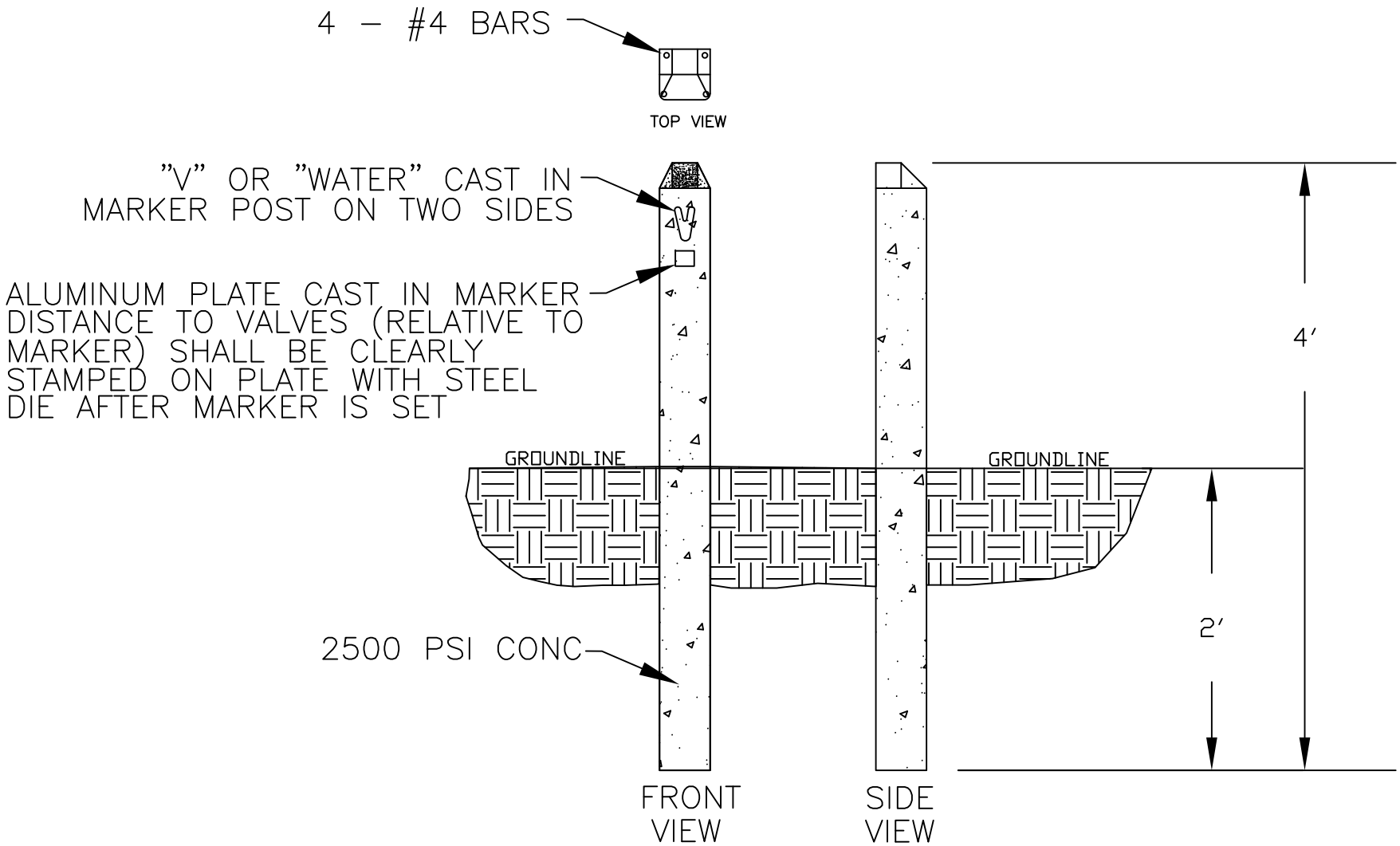

CITY OF FAIRBURN
WATER & SEWER
56 MALONE STREET
FAIRBURN, GEORGIA 30213
770-964-2244

VALVE MARKER DETAIL

W-0019

DESIGNED: J.F.C.	DRAWN:
DATE: 01/15	SCALE: N.T.S.

BY	REVISIONS	DATE

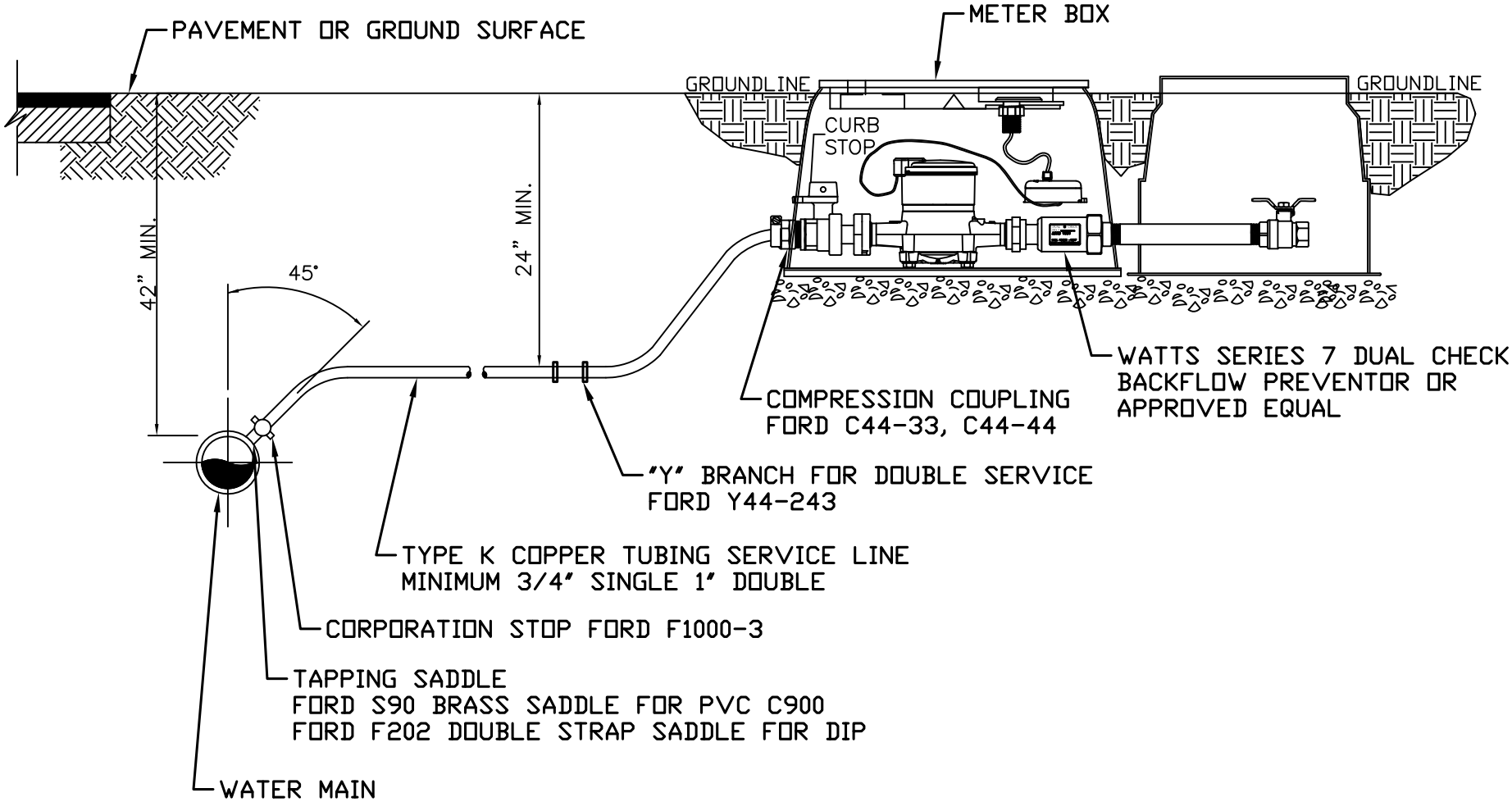

CITY OF FAIRBURN
WATER & SEWER
56 MALONE STREET
FAIRBURN, GEORGIA 30213
770-964-2244

RESIDENTIAL SHORT SIDE SERVICE INSTALLATION

W-0020

DESIGNED: J.F.C.	DRAWN:
DATE: 01/15	SCALE: N.T.S.

BY	REVISIONS	DATE

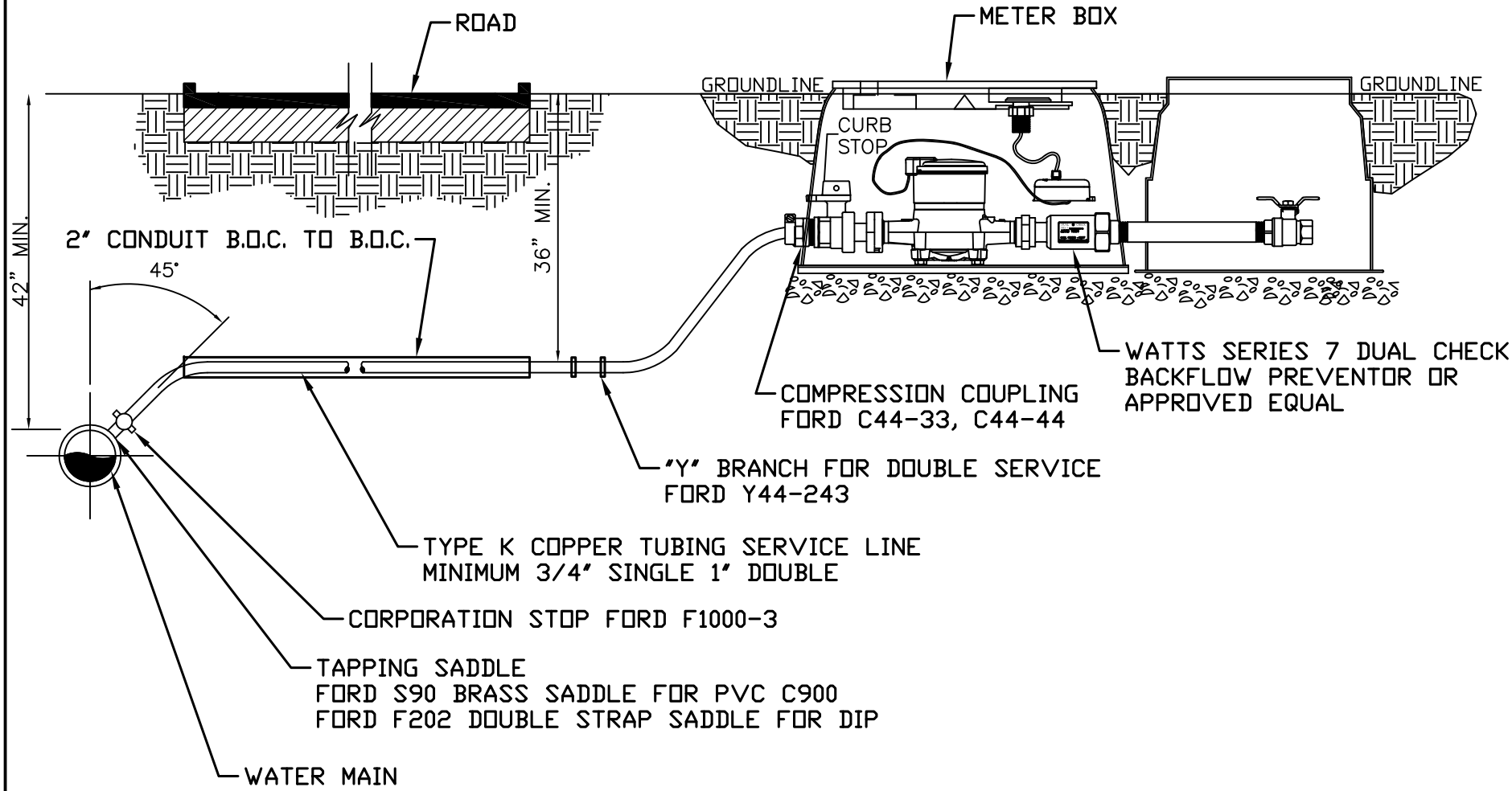

CITY OF FAIRBURN
WATER & SEWER
56 MALONE STREET
FAIRBURN, GEORGIA 30213
770-964-2244

RESIDENTIAL LONG SIDE SERVICE INSTALLATION

W-0020A

DESIGNED: J.F.C.	DRAWN:
DATE: 01/15	SCALE: N.T.S.

BY	REVISIONS	DATE

NOTE:
THIS DETAILS APPLICATION USED
FOR WATER MAIN PROTECTION
FOR ROADS CONSTRUCTED OVER
EXISTING WATER MAINS

PROFILE VIEW

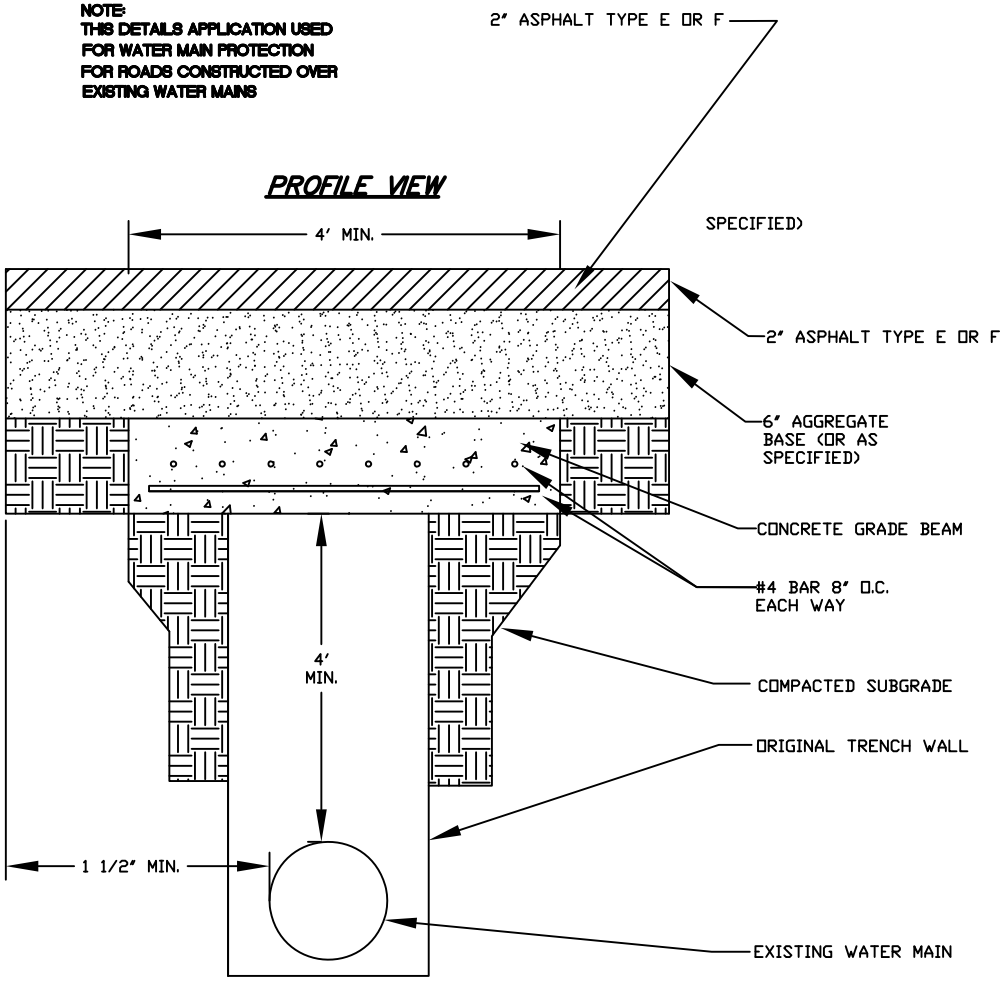

CITY OF FAIRBURN
WATER & SEWER
56 MALONE STREET
FAIRBURN, GEORGIA 30213
770-964-2244

CONCRETE GRADE BEAM DETAIL

W-0022A

DESIGNED: J.F.C.	DRAWN:
DATE: 01/15	SCALE: N.T.S.

BY	REVISIONS	DATE

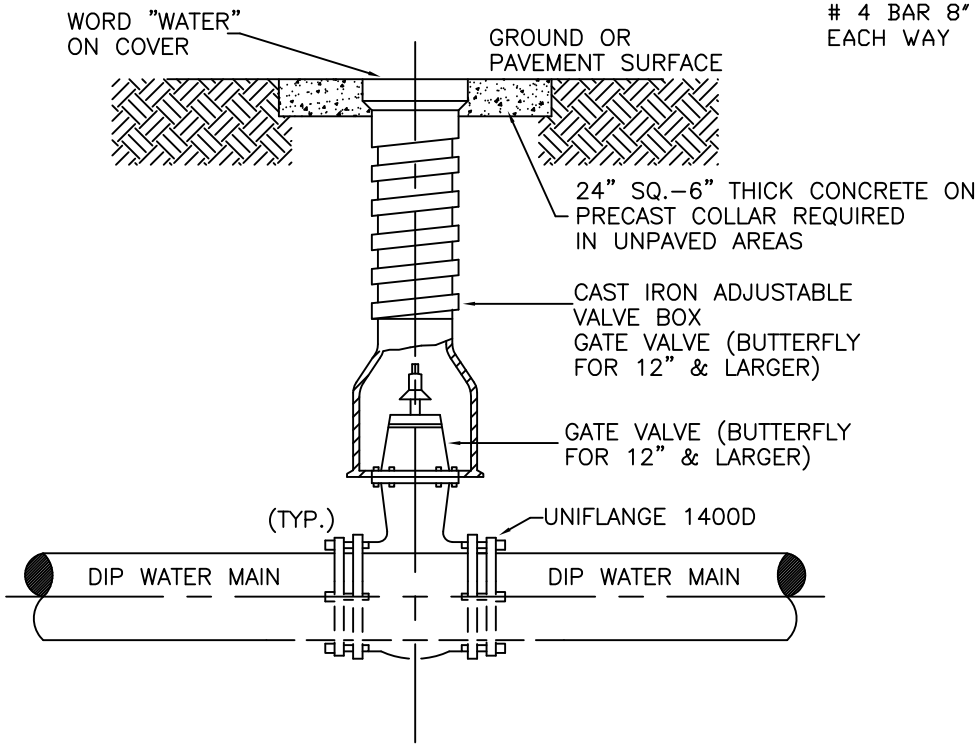

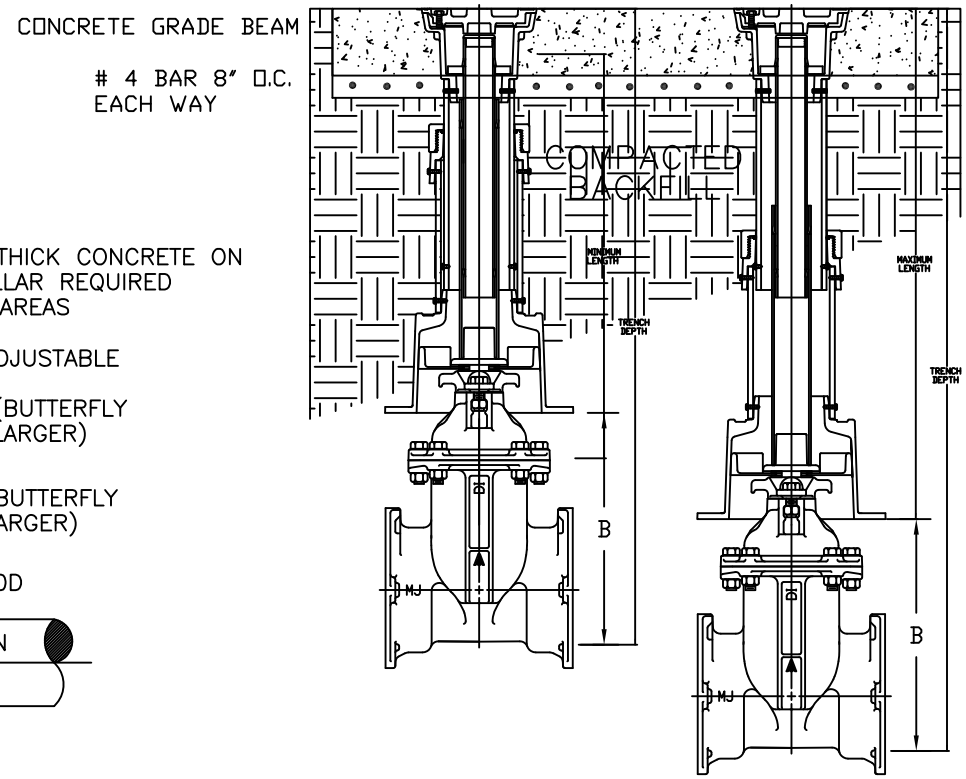

WHERE VALVE MARKERS ARE REQUIRED, INSTALL PRECAST REINFORCED CONCRETE SQUARE POST, MINIMUM 4" SQUARE AND 6 FEET LONG, ENGRAVED WITH WORD "VALVE" IN 2" HIGH LETTERING.

X	X	X	X	X
LET'R	REVISIONS	DATE	BY	CKD

PART NAME	SCALE 1:2	CAGE NO. 79218	
DIAGRAM FOR THE AFC VALVE AND HYD MANUAL (TRENCH ADAPTER) (NEW STEM DESIGN)	DRN TTR	CKD MJU	
	DATE DRN 3-14-00	DATE REL X	
	NSN X		
	REF LAYOUT X		
	DWG/PART NO.	SHEET 1 OF 1	
Waterous DEPENDABLE	IL1716-8		

WATEROUS COMPANY * 300 JOHN E. CARROLL AVE EAST * SOUTH ST. PAUL, MINNESOTA 55075-1191

A-997

CITY OF FAIRBURN
WATER & SEWER
56 MALONE STREET
FAIRBURN, GEORGIA 30213
770-964-2244

WATER LINE VALVE INSTALLATION

W-0023

DESIGNED: J.F.C. DRAWN:

DATE: 01/15 SCALE: N.T.S.

BY	REVISIONS	DATE

SPECIFICATIONS:

The CUSTOMER/OWNER shall furnish and have installed a Double Check Valve Backflow Preventer Assembly (DCV-BFP)
in a size equal that of the service meter. The DCV-BFP assembly shall include a full-port ball valve on the inlet and outlet
sides and a union or swivel coupling nut between the device and each valve. Unions or swivel coupling nuts are to be integral
with the device or valves.
The device shall have three (3) ball valve test cocks in the vertical position fitted with brass or plastic threaded plugs. A fourth (4th)
test cock shall be provided on the up stream side of the inlet shut-off valve.
All components of the assembly, including ball valve handles and assembly bolts, shall be equal in corrosion resistance to bronze or
stainless steel to resist electrolysis.
Access to both checking devices shall be by top and/or side entry for maintenance and repair of all interior parts and shall have
replacable seats.

The DCV-BFP assembly shall be certified by a nationally recognized testing laboratory in accordance with ASSE Standard 1015 and
bear the ASSE seal. The DCV-BFP assembly shall have current approved from the University of Southern California Foundation for
Cross-Connection-Control (USC-FCCC). The assembly shall be tested, shipped, and installed as a complete unit.

APPROVED DEVICES:

See Coweta County Water and Sewer for approved devices.

INSTALLATION INSTRUCTIONS:

The DCV-BFP assembly shall be installed in a utility box adjacent to, or as close as possible to, the outlet side of the meter installation.
Under no condition will any connection be allowed between the service meter and a backflow perventer used for system containment.

See City of Fairburn Water and Sewer for approved utility boxes.

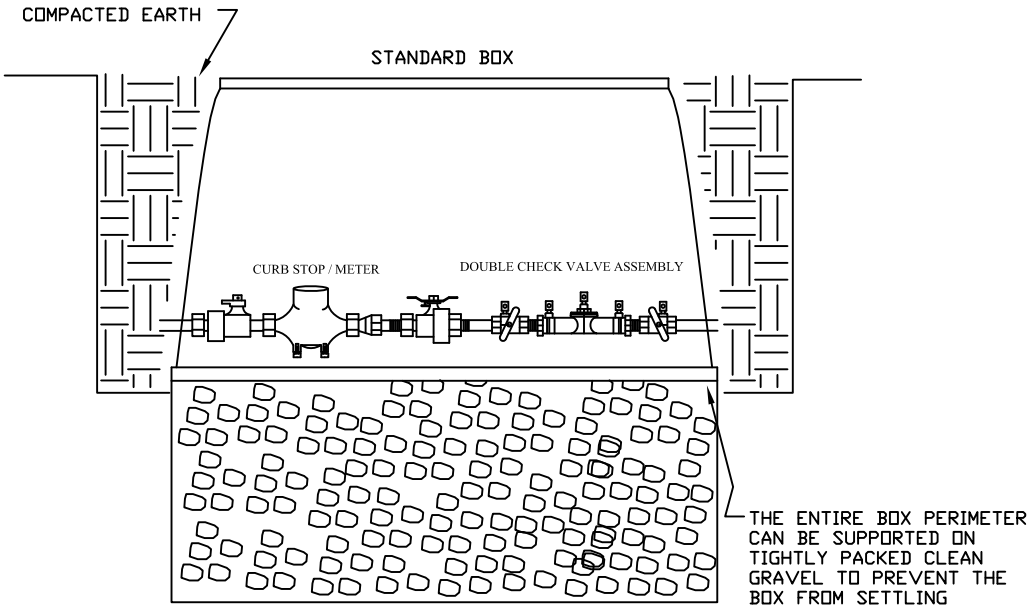

CITY OF FAIRBURN
WATER & SEWER
56 MALONE STREET
FAIRBURN, GEORGIA 30213
770-964-2244

COMMERCIAL METER SOIL APPLICATION

W-0024

DESIGNED: J.F.C.	DRAWN:
DATE: 01/15	SCALE: N.T.S.

BY	REVISIONS	DATE

Ⓐ BODY DESIGN HIGH-STRENGTH DIAMOND PLATE TOOLBOX MATERIAL (HAS AN OUTER SHELL & INSULATING MIDDLE LAYER)

Ⓑ GAS SPRING LID LIFTS

Ⓒ LEAK PROOF STAINLESS STEEL PADDLE HANDLES

Ⓓ LOCKABLE LID FOR ALLOWING EASY ACCESS FOR TESTING, MAINTENANCE & METER READING

Ⓔ LID DESIGN HAS AN OUTER SHELL AN INSULATING MIDDLE LAYER AND A REVERSE BEVELED EDGE LID LINER

Ⓕ BADGER 3" FIRE HYDRANT METER

Ⓖ APOLLO DC, TOP-ENTRY, 2" 40 SERIES, BRZ, 40-108-T2

Ⓗ 12" COPPER SLEEVE

Ⓘ 2" GATE VALVE

Ⓙ FIRE HOSE COUPLING

Ⓚ HANDLE (FOLDS DOWN INTO VAULT)

Ⓛ FIRE HYDRANT CONNECTION

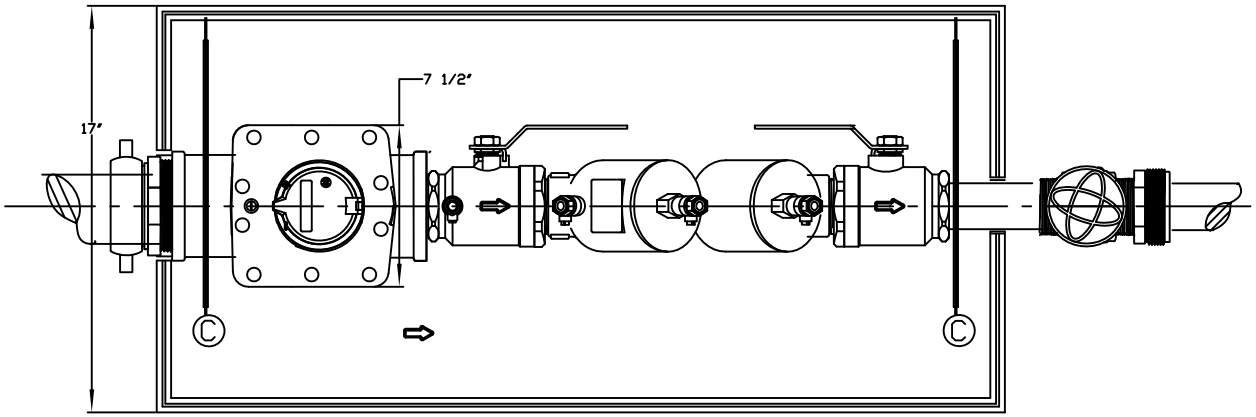

TOP VIEW

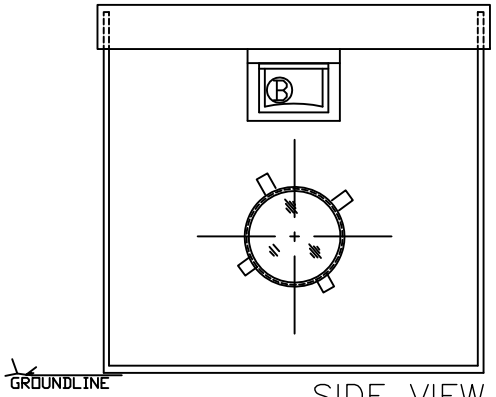

SIDE VIEW

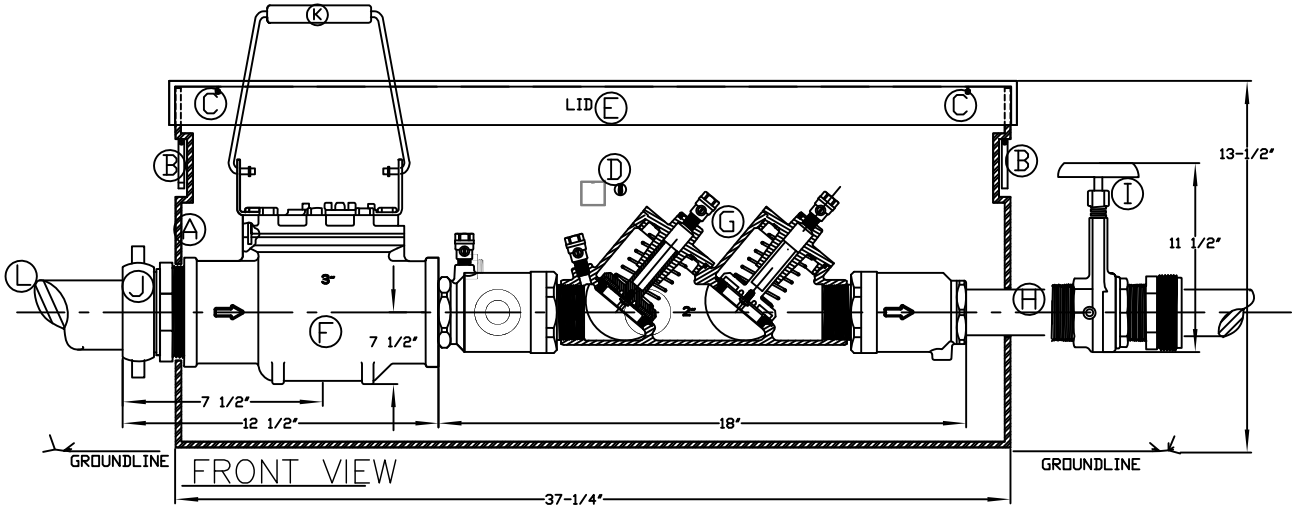

FRONT VIEW

CITY OF FAIRBURN WATER & SEWER 56 MALONE STREET FAIRBURN, GEORGIA 30213 770-964-2244	FIRE HYDRANT METER VAULT INSTALLATION *STANDARD OPERATIONAL PROCEDURE 3" BADGER FIRE HYDRANT METER 2" DOUBLE CHECK ASSEMBLY	W-0025	BY / REVISIONS / DATE
		DESIGNED: J.F.C. / DRAWN:	
		DATE: 01/15 / SCALE: N.T.S.	

BY-PASS METER ASSEMBLY
REFLECTED IN THIS DETAIL:
20R700WWFF 777
SPECIAL 2" NO RISE
METERSETTER-ASSEMBLY
NOTE: ANY SETTER ABOVE A
2" IS NOT A STOCK PIECE
AND IS CUSTOM MADE.

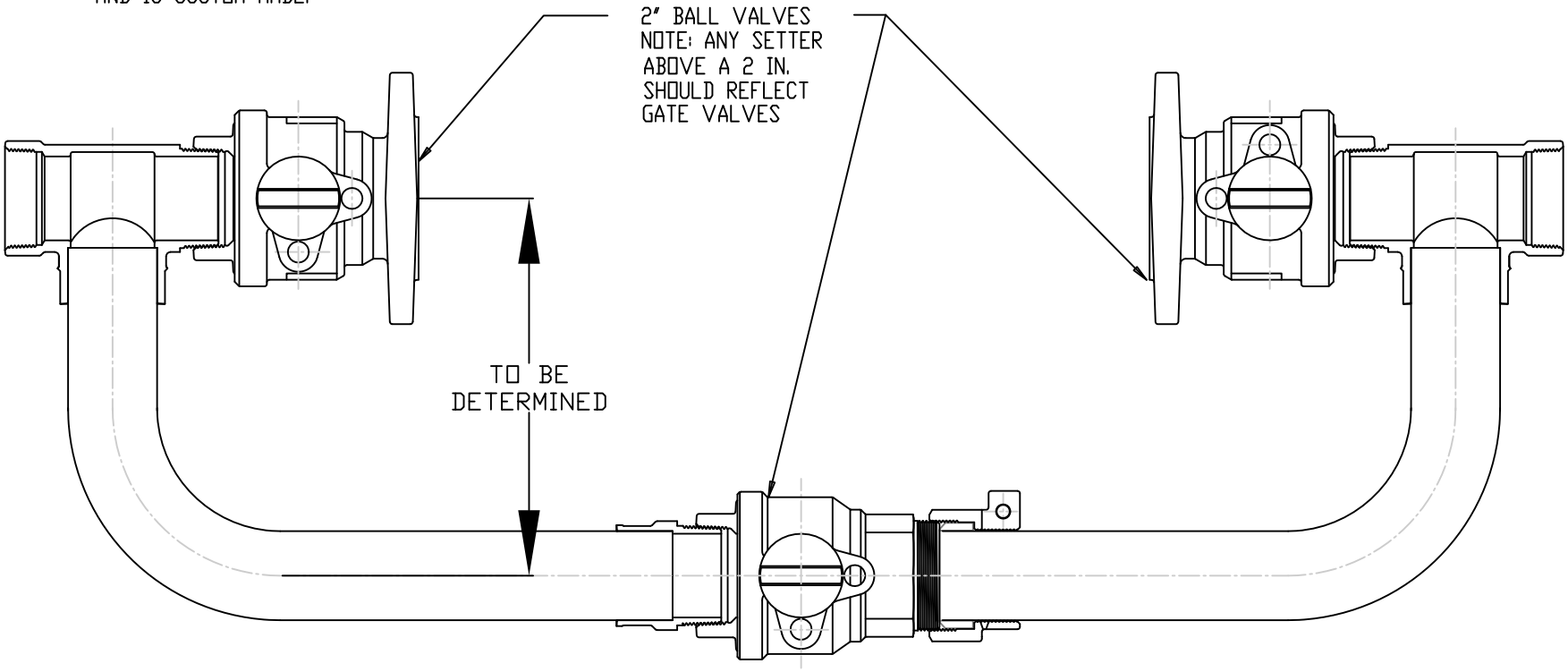

CITY OF FAIRBURN
WATER & SEWER
56 MALONE STREET
FAIRBURN, GEORGIA 30213
770-964-2244

BY-PASS LINE ASSEMBLY

W-0026

DESIGNED: J.F.C.	DRAWN:
DATE: 01/15	SCALE: N.T.S.

BY	REVISIONS	DATE

*STANDARD OPERATIONAL PROCEDURE

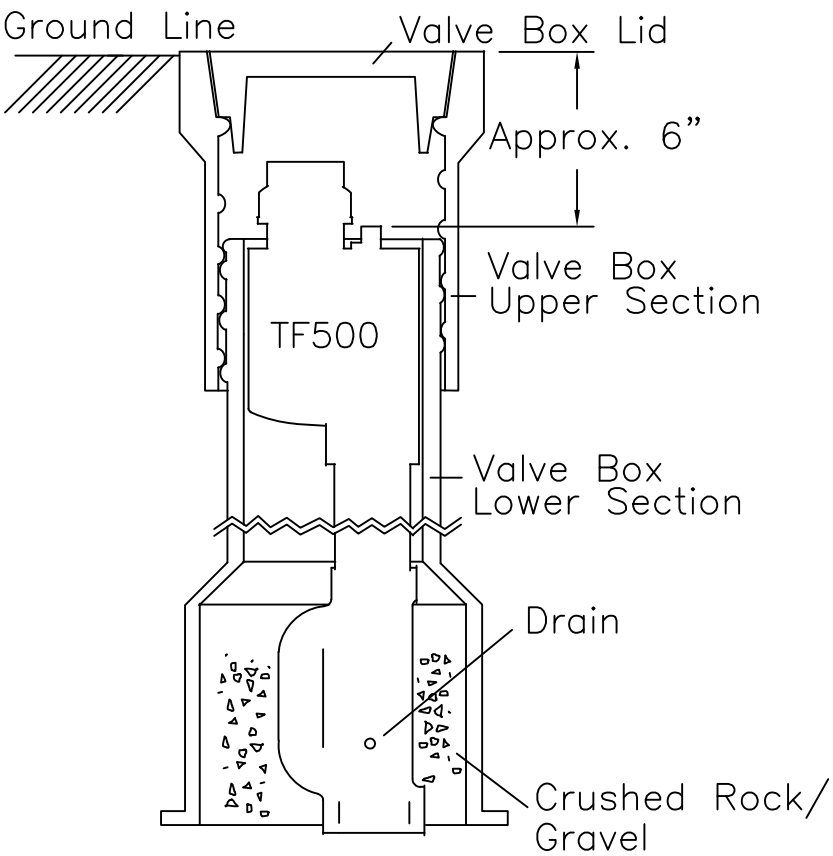

TF500 TRUFLOW BLOW-OFF HYDRANT

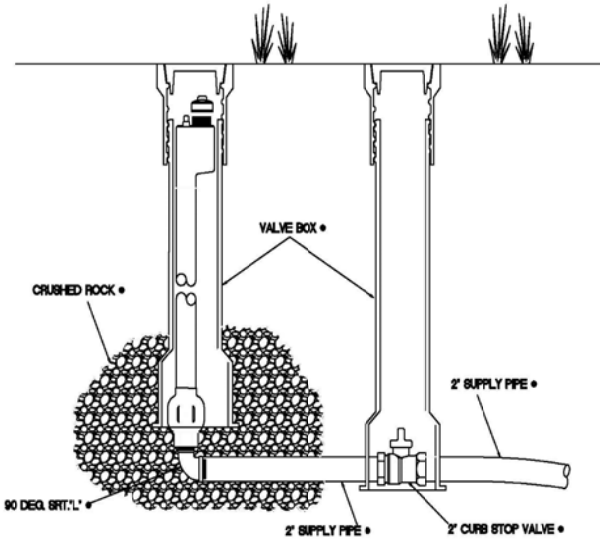

Inlet Connection Details

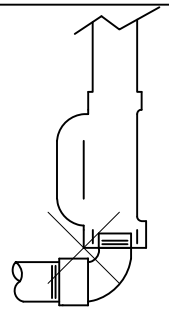

Vertical 2" FIP threaded inlet w/brass ell

Hydrant shall fit in a 5–1/4" ID valve box.
Hydrant shall be non–freezing and self–draining.
Hydrant shall be operated by turning a top–mounted 9/16" square operating nut counterclockwise to open, clockwise to close. Hydrant must seal the drain outlet in all positions from 1/4"–open to fully–open.
All internal working parts, the inlet, and the outlet shall be brass.
All working parts shall be serviceable from above with no digging required. Disassembly must be accomplished with no turning forces applied to the hydrant barely. All wear parts (o–rings and valve seat) shall be of commonly available dimensions and material, and none may be of vendor–unique design. Hydrant shall be the Model TF500 as manufactured by The Kupferle Foundry Co., St. Louis, MO 63102.

– Insure that the hydrant is free to move vertically within the valve box. In order to prevent the transmission of traffic loads to the hydrant, it should not be jammed or wedged against the valve box ID.
–Follow the suggestions of the AWWA for hydrant installation. In particular, surrounding the drain port with a sufficient amount of crushed rock/gravel to provide an adequate drain field.

CITY OF FAIRBURN
WATER & SEWER
56 MALONE STREET
FAIRBURN, GEORGIA 30213
770–964–2244

BLOW-OFF VALVE INSTALLATION

W–0028

DESIGNED: J.F.C.	DRAWN:
DATE: 01/15	SCALE: N.T.S.

BY	REVISIONS	DATE