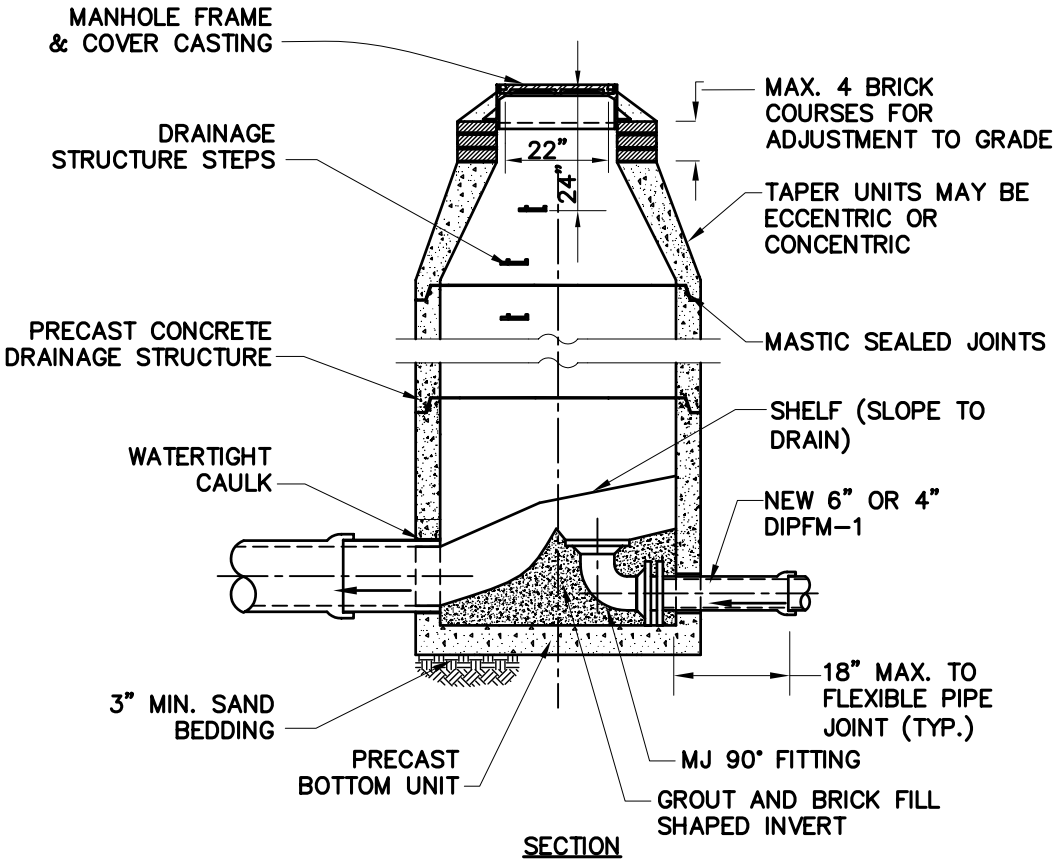

SECTION

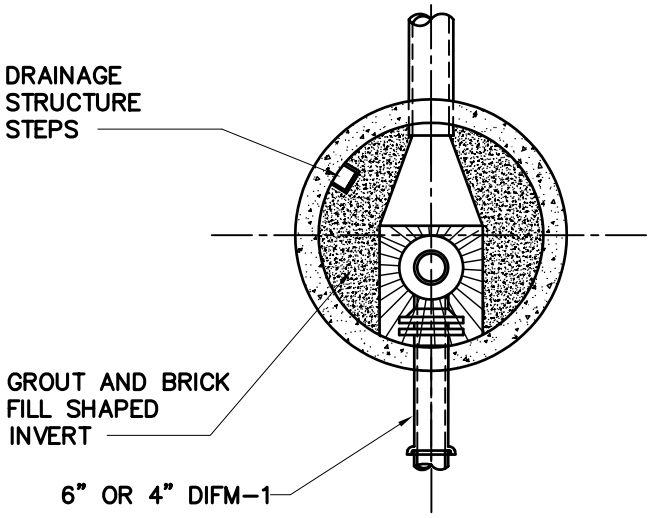

INVERT PLAN

CITY OF FAIRBURN, GEORGIA
FORCEMAIN
CONNECTION MANHOLE

DATE:
08/28/07
DETAIL NO.
S008